ZETA 85

3-Cylinder, Low-Pressure Diaphragm Pumps

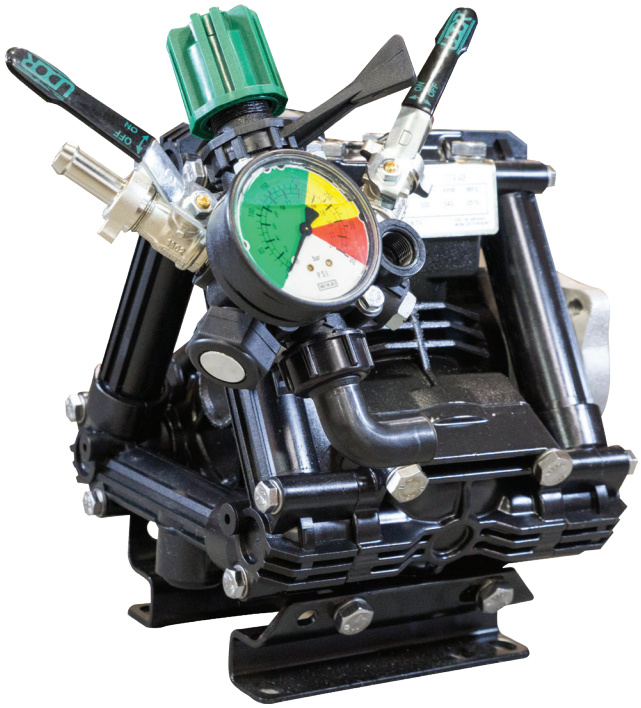

ZETA 85 low pressure 3-cylinder diaphragm pumps have anodized aluminum bodies with plasticized aluminum heads, stainless steel valves and glass-filled nylon manifolds. A control valve with pressure gauge is standard on all models.

ZETA pumps are excellent for various horticultural and agricultural spraying applications.

Pumps are available with Universal VA Drive Face or gear reductions for 4 to 6.5 HP gas engines.

Model	GPM	l/min	PSI	bar	RPM	Drive Configuration	Weight
ZETA 85 VA	22.0	85	300	20	550	Universal VA Drive Face.	29 LBS
ZETA 85 VAGR3/4	22.0	85	300	20	550	Gear Reduction for 3/4" Shaft Gas Engine, 4-6.5 HP	36 LBS

Specifications	ZETA 40
Inlet Port	1-1/2" Hose Barb
Outlet Ports - Valve	(2) 1/2" Hose Barb
Bypass	3/4" Hose Barb
Piston Diameter	60.0mm
Crankshaft Stroke/Code	18.0mm / A
Dims. - Pump Only	11"L x 11"W x 12"H
- GR Version	16"L x 11"W x 12"H

Lubrication: Requires 39 oz. of Udor Lube 40W Premium Pump Oil.
Alternate Oil: 30W non-detergent or 15W-40 non-detergent oil.

Description	Part #
Diaphragm Kit - GREENTECH	6062.97
Diaphragm Bolt & Washer Kit	6062.48
Valve Kit	6062.D8
Regulator Repair Kit	6062.A9
Complete Repair Kit	8700.60CK

UDOR USA

World Leader in Diaphragm and Plunger Pumps

6180 140th Avenue NW
Ramsey, MN 55303

Ph: 651-785-0666
Fax: 800-732-2670

www.udorusa.com
sales@udorusa.com

Scan this QR Code for More Information

ZETA 85 VAGR3/4

Maximum Flow	22 GPM / 85 lpm
Maximum Pressure	300 PSI / 20 bar
Maximum RPM	550 RPM
Inlet Port - Hose Barb	1-1/2" HB
Outlet Ports - Hose Barb, Valve	(2) 1/2" HB
Bypass - Hose Barb	3/4" HB
Dimensions - ZETA 85 GR	16"L x 11"W x 12"H
Weight - ZETA 85 GR	36 lbs

Lubrication: Requires 39 oz. of Udor Lube 40W Premium Pump Oil.
Alternate Oil: 30W non-detergent or 15W-40 non-detergent oil.

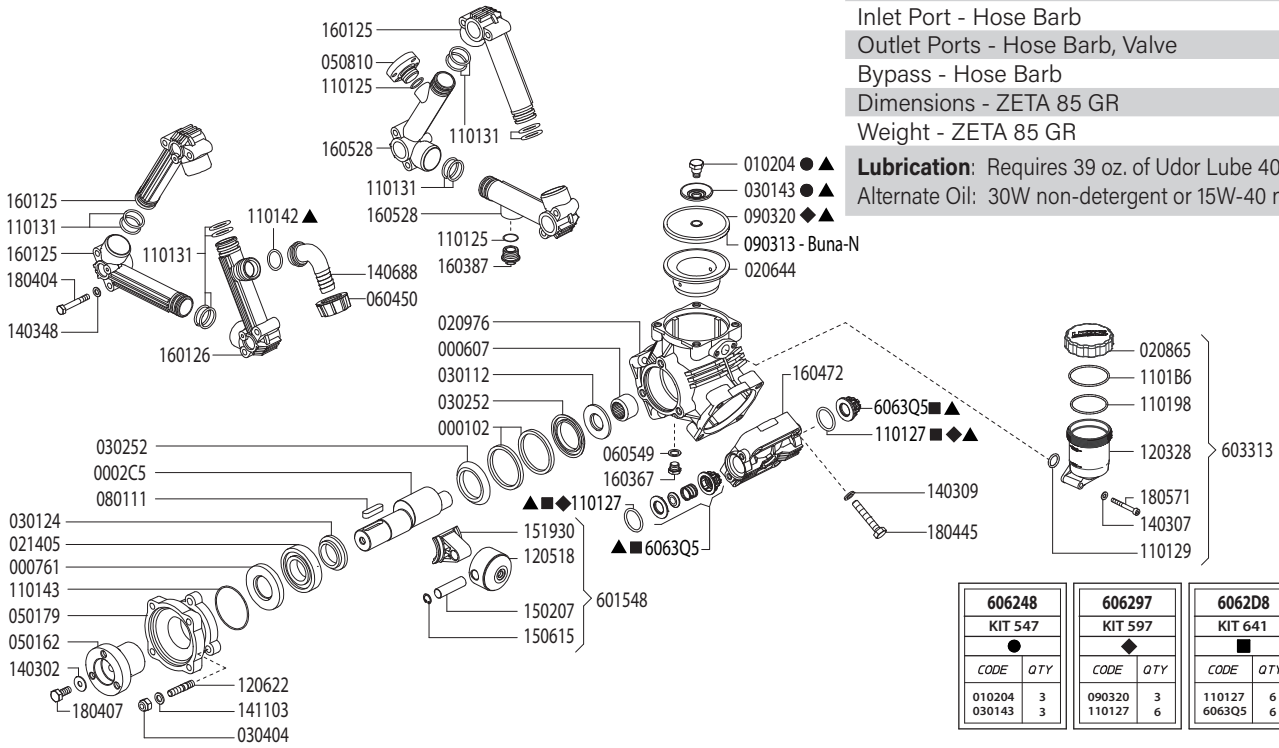

606248 KIT 547 ●	
CODE	QTY
010204	3
030143	3

606297 KIT 597 ◆	
CODE	QTY
090320	3
110127	6

6062D8 KIT 641 ■	
CODE	QTY
110127	6
6063Q5	6

8700.60CK ▲	
CODE	QTY
010204	3
030143	3
090320	3
110127	6
110142	1
6063Q5	6

Revised 3-5-2026

Part #	Description	Qty
0001.02	RETAINER RING	2
0002.C5	CRANKSHAFT	1
0006.07	BEARING D25	1
0007.61	OIL SEAL D35	1
0102.04	DIAPHRAGM BOLT ●▲	3
0206.44	PISTON SLEEVE D60	3
0208.65	OIL RESERVIOR CAP	1
0209.76	CRANKCASE	1
0214.05	BALL BEARING D35	1
0301.12	BEARING DISC D25	1
0301.24	BEARING DISC D35	1
0301.43	DIAPHRAGM WASHER ●▲	3
0302.52	ROD SPACER	2
0304.04	NY-LOCK NUT M10	3
0501.62	ADAPTER - VA	1
0501.79	FLANGE - VA	1
0508.10	REGULATOR MOUNTING ADAPTER	1
0604.50	BARB NUT G1-1/2"	1
0605.49	OIL PLUG GASKET	1
0801.11	KEY 10X8X40	1
0903.20	PISTON DIAPHRAGM 100mm,BUNA-N	3
0903.20	PISTON DIAPHRAGM 100mm,GREENTECH ◆▲	3
1101.25	O-RING - PLUG & ADAPTER	2
1101.27	O-RING - VALVE ◆■▲	6
1101.29	O-RING - OIL RESERVIOR	1
1101.31	O-RING - MANIFOLD	12
1101.42	O-RING - INLET BARB▲	1
1101.43	O-RING - FLANGE	1
1101.98	O-RING - OIL RESERVIOR	1
1101.B6	O-RING - OIL RESERVIOR	1
1203.28	OIL RESERVIOR	1
1205.18	ALUMINUM PISTON D60	3

Part #	Description	Qty
1206.22	STUD M10X46	3
1403.02	WASHER M10	3
1403.07	WASHER M8	2
1403.09	WASHER M10	12
1403.48	WASHER M8	12
1406.88	SUCTION HOSE BARB 1-1/2"	1
1411.03	SERATED WASHER M10	3
1502.07	CONNECTING ROD PIN 15X54	3
1506.15	SNAP RING D15	3
1519.30	CONNECTING ROD	3
1601.25	INLET/OUTLET MANIFOLD TUBE	3
1601.26	SUCTION MANIFOLD TUBE G1-1/2" M	1
1603.67	OIL PLUG G1/4"	1
1603.87	MANIFOLD PLUG G3/4"	2
1604.72	HEAD	3
1605.28	DISCHARGE MANIFOLD TUBE G3/4" F	2
1804.04	HEX BOLT M8X55	12
1804.07	HEX BOLT M10X25	1
1804.45	HEX BOLT M10X60	12
1805.71	ALLEN BOLT M6X50	2
6015.48	PISTON / ROD ASSEMBLY D60	3
6033.13	OIL RESERVIOR ASSEMBLY	1
6063.Q5	VALVE ASSEMBLY W/O O-RING ■▲	6
6062.48	DIAPHRAGM WASHER/BOLT (KIT 547)	1
6062.97	DIAPHRAGM KIT - GREENTECH (KIT 597)	1
6062.D8	INLET/OUTLET VALVE KIT (KIT 641)	1
8700.60CK	COMPLETE REPAIR KIT	1

● Parts in 6062.48 (Kit 547)
◆ Parts in 6062.97 (Kit 597).
■ Parts in 6062.D8 (Kit 641).
▲ Parts in 8700.60CK

S160 5027.75

GAS ENGINE GEAR REDUCTION FOR KAPPA-55, ZETA-40/85/120 DIAPHRAGM PUMPS on GAS ENGINES with 3/4" SHAFTS

REQUIRES 16 OZ. 90W GEAR LUBE

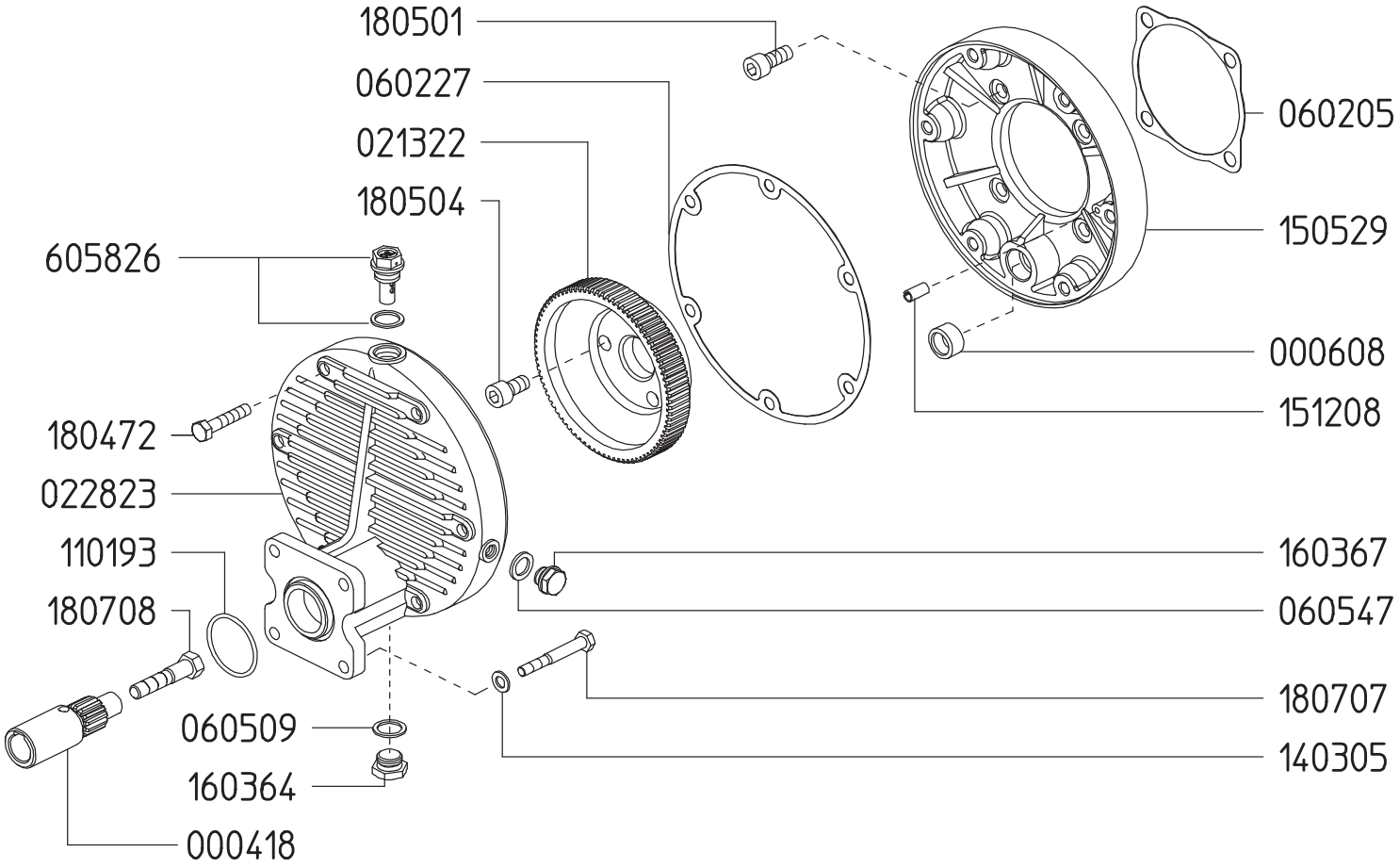

Revised 3-5-2026

Part #	Description	Qty
0004.18	GEAR SHAFT - 3/4"	1
0006.08	BEARING	1
0213.22	PUMP GEAR - VA	1
0228.23	GEAR CASE - ENGINE	1
0602.05	GASKET	1
0602.27	GASKET	1
0605.09	GASKET - ALUMINUM	1
0605.47	GASKET - ALUMINUM	1
1101.93	O-RING	1
1403.05	WASHER	4

Part #	Description	Qty
1505.29	GEAR CASE - PUMP	1
1512.08	ALIGNMENT PIN	1
1603.64	OIL PLUG G3/8	1
1603.67	OIL PLUG G1/4	1
1804.72	HEX BOLT M8X50	6
1805.01	ALLEN BOLT M10X25	4
1805.04	ALLEN BOLT M10X20	3
1807.07	HEX BOLT 5/16 X 1"	4
1807.08	HEX BOLT 5/16 X 2-1/4"	1
6058.26	VENTED OIL CAP	1

DL 6010.95

Adjustable Pressure Regulator

Maximum Flow	27.0 GPM / 102 lpm
Maximum Pressure	350 PSI / 24 bar
Inlet Port - Hose Barb	-
Outlet Ports - Hose Barb, Valve	(2) 1/2" HB
Bypass - Hose Barb	3/4" HB

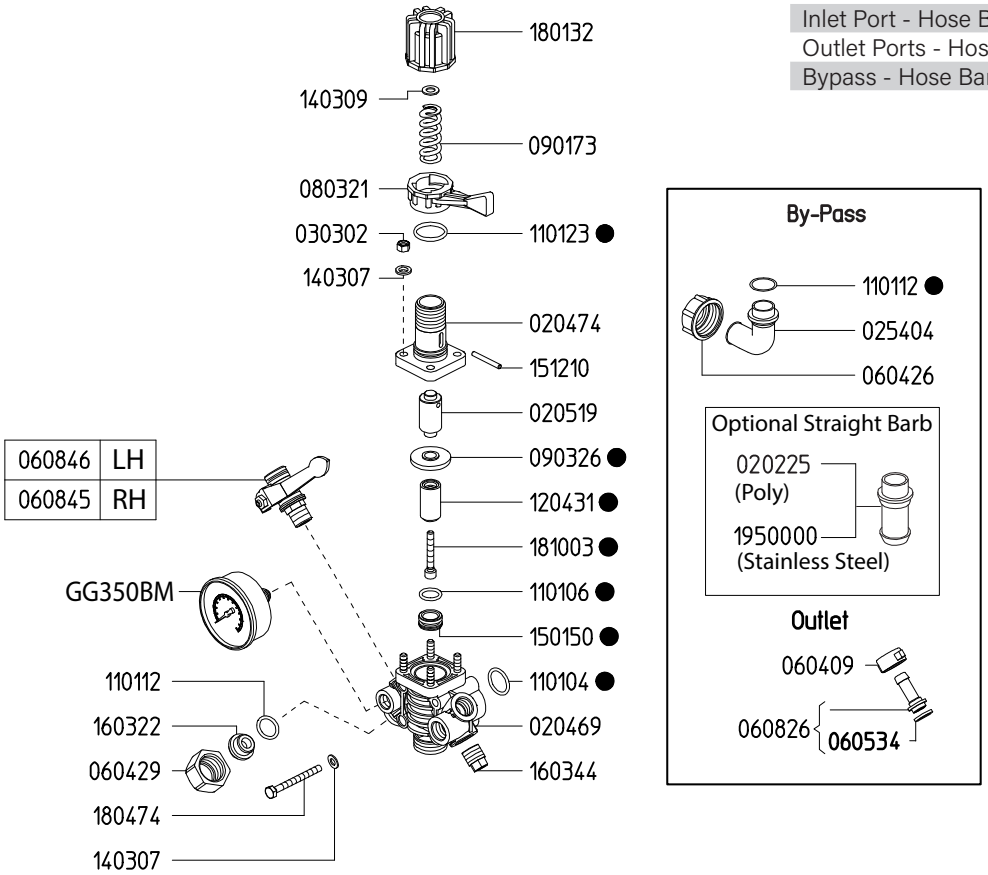

6062A9	
KIT 608	
●	
CODE	QTY
090326	1
110104	1
110106	1
110112	1
110123	1
120431	1
150150	1
181003	1

Revised 9-25-2024

Part #	Description	Qty
0202.25	BYPASS HOSE BARB - STRAIGHT (OPTIONAL)	1
0204.69	BODY	1
0204.70	BODY	1
0205.19	CYLINDER	1
0254.04	BYPASS HOSE BARB - ELBOW	1
0303.02	NUT	4
0604.09	BARB NUT	2
0604.26	BYPASS BARB NUT	1
0604.29	NUT	1
0605.34	GASKET	2
0608.26	1/2" HOSE BARB W/GASKET	2
0608.45	BALL VALVE - RIGHT	1
0608.46	BALL VALVE - LEFT	1
0803.21	LEVER	1
0901.73	SPRING (LP 300 PSI)	1
0903.26	DIAPHRAGM ●	1
1101.04	O-RING ●	1

Part #	Description	Qty
1101.06	O-RING ●	1
1101.12	O-RING ●	2
1101.23	O-RING ●	1
1204.31	POPPET ●	1
1403.07	WASHER	6
1501.50	SEAT ●	1
1512.10	PIN	1
1603.22	PLUG	1
1603.44	PLUG	1
1801.32	ADJUSTMENT KNOB	1
1804.74	BOLT	2
1810.03	STAINLESS STEEL BOLT ●	1
19500.00	BYPASS HOSE BARB - STRAIGHT, SS (OPTIONAL)	1
6062.A9	REPAIR KIT FOR 6010.9X CONTROL UNIT (KIT 608)	1
GG350BM	PRESSURE GAUGE - 350 PSI BACK MOUNT	1

● Parts Included in Repair Kit #6062.A9 (KIT 608)

The control unit features a manual dump valve, pressure control knob, glycerine filled pressure gauge, and two ball valve discharge ports.

1. Before operating or re-operating the pump move lever (0803.21) to the dump position (Right) so the pump will start at zero pressure. (Failure to do so will void the pump warranty.)
2. Turn pressure adjustment knob (1801.32) counter clockwise to relieve spring tension. This step only applies to the initial start up and is not necessary in daily operation of pump.
3. Start unit and let run until air is evacuated from the system.
4. Move lever (0803.21) to the pressure position (Left) open spray gun or spray boom and turn the pressure adjustment knob (1801.32) clockwise until desired operating pressure is achieved.

ZETA 40/85 DIMENSIONS

All Dimensions are WITHOUT Control Unit or Regulator

Dimensional Drawings are Shown in Millimeters. To Convert to Inches, Multiply Dimension x 0.03937

Specifications	ZETA 40	ZETA 85
Inlet Port - Hose Barb	1" HB	1-1/2" HB
Outlet Ports - Hose Barb, Valve	(2) 1/2" HB	(2) 1/2" HB
Bypass - Hose Barb	3/4" HB	3/4" HB
Dimensions - Pump Only	11"L x 11"W x 12"H	
- GR Version	16"L x 11"W x 12"H	
Diaphragm Material	GREENTECH (Std) Buna-N (Opt)	

Lubrication: Requires 39 oz. of Udor Lube 40W Premium Pump Oil. Alternate Oil: 30W non-detergent or 15W-40 non-detergent oil.

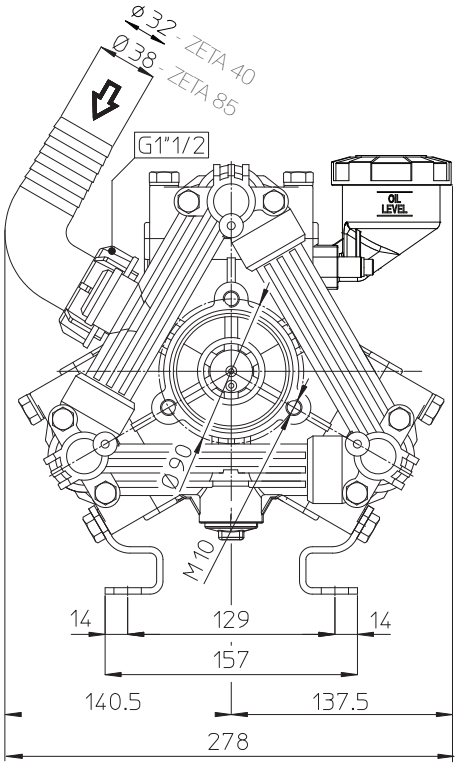

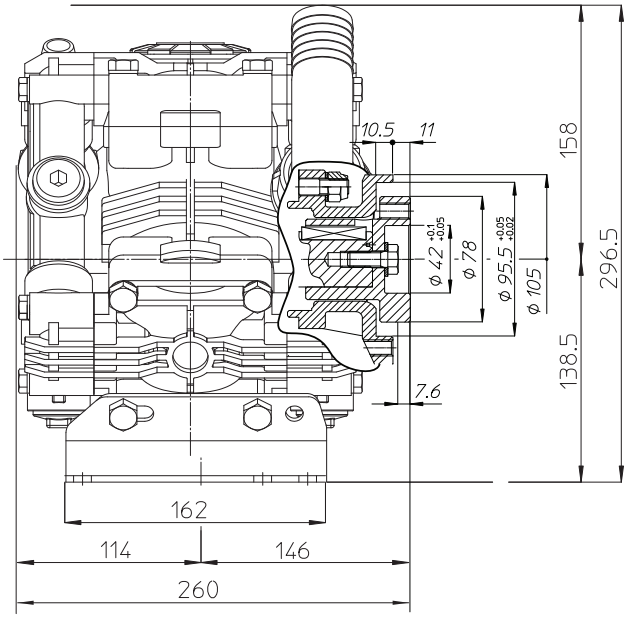

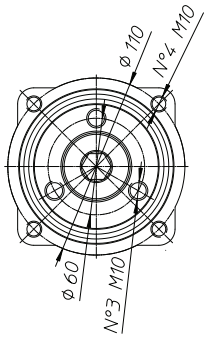

VA Universal Drive Face Detail

Dimensional Drawings are Shown in Millimeters. To Convert to Inches, Multiply Dimension x 0.03937

TORQUE SPECS
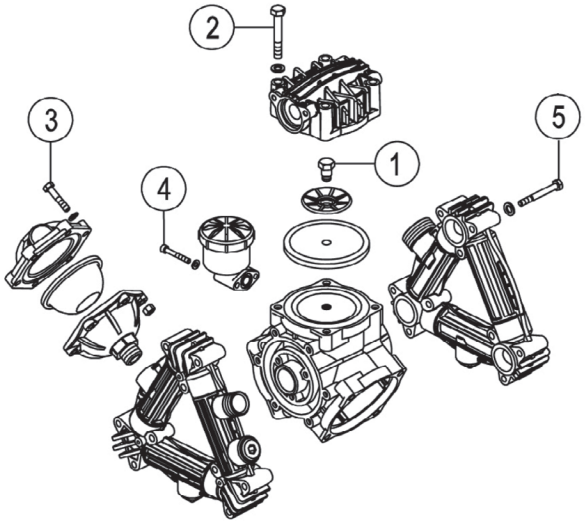
Ref.	Description	Ft./lb.	Nm
1	**Diaphragm Bolts** (Use Loctite 243)	18	25
2	**Head Bolts**	30	40
3	**Pulsation Dampener Bolts**	18	25
4	**Oil Cup Bolts**	6	8
5	**Manifold Bolts (Plastic)**	14	20