ZETA 350

6-Cylinder, Low-Pressure Diaphragm Pumps

ZETA 350 low pressure 6-cylinder diaphragm pumps have anodized aluminum bodies with plasticized aluminum heads, stainless steel valves and glass-filled nylon manifolds.

ZETA 350 pumps are excellent for various horticultural and agricultural spraying applications.

Pumps are available with a 1-3/8" Male PTO thru-shaft or 2-bolt A-flange hydraulic motor mount with 1" hollow shaft.

Model	GPM	l/min	PSI	bar	RPM	Drive Configuration	Weight
ZETA 350 TS2C	92.0	345.0	300	20	550	1-3/8" 6-Spline Male PTO Thru-Shaft	155 LBS
ZETA 350 MI1	92.0	345.0	300	20	550	2-Bolt, A-Flange, 1" Hollow Shaft for Hydraulic Motor	155 LBS

Specifications	ZETA 400
Inlet Port	2" & 2-1/2" Hose Barb
Outlet Ports - Valve	(2)1-1/2" Hose Barb
Piston Diameter	75.0mm
Crankshaft Stroke/Code	16.0mm / X
Dims. - Pump Only	20.5"L x 14.5"W x 23"H

Lubrication: Requires 155 oz. of Udor Lube 40W Premium Pump Oil.
Alternate Oil: 30W non-detergent or 15W-40 non-detergent oil.

Description	Part #
Diaphragm Kit (GREENTECH)	6062.G1
Diaphragm Bolt & Washer Kit	6062.G2
Valve Kit	6062.F9
Complete Repair Kit	8700.43CK

UDOR USA
World Leader in Diaphragm and Plunger Pumps

An UDOR Brand
BOOMINATOR
BOOMLESS SPRAY NOZZLES

6180 140th Avenue NW
Ramsey, MN 55303

Ph: 651-785-0666
Fax: 800-732-2670

www.udorusa.com
www.boominator.com
info@udorusa.com

Scan this QR Code for More Information

ZETA 350 TS2C

Maximum Flow	92.0 GPM / 345 lpm
Maximum Pressure	300 PSI / 20 bar
Maximum RPM	550 RPM
Inlet Port - Hose Barb	2" & 2-1/2" HB
Outlet Port - Hose Barb	(2)1-1/2" HB
Bypass - Hose Barb	-
Dimensions	20.5"L x 14.5"W x 23"H
Weight	155 lbs

Lubrication: Requires 155 oz. of Udor Lube 40W Premium Pump Oil.
Alternate Oil: 30W non-detergent or 15W-40 non-detergent oil.

8700.43CK ▲	
CODE	QTY
010217	6
030176	6
090362	6
110142	1
110193	4
1101D2	2
1101E3	12
6006A5	12

6062F9 KIT 660 ■	
CODE	QTY
1101E3	12
6006A5	12

6062G1 KIT 661 ◆	
CODE	QTY
090362	6
1101E3	12

6062G2 KIT 662 ●	
CODE	QTY
010217	6
030176	6

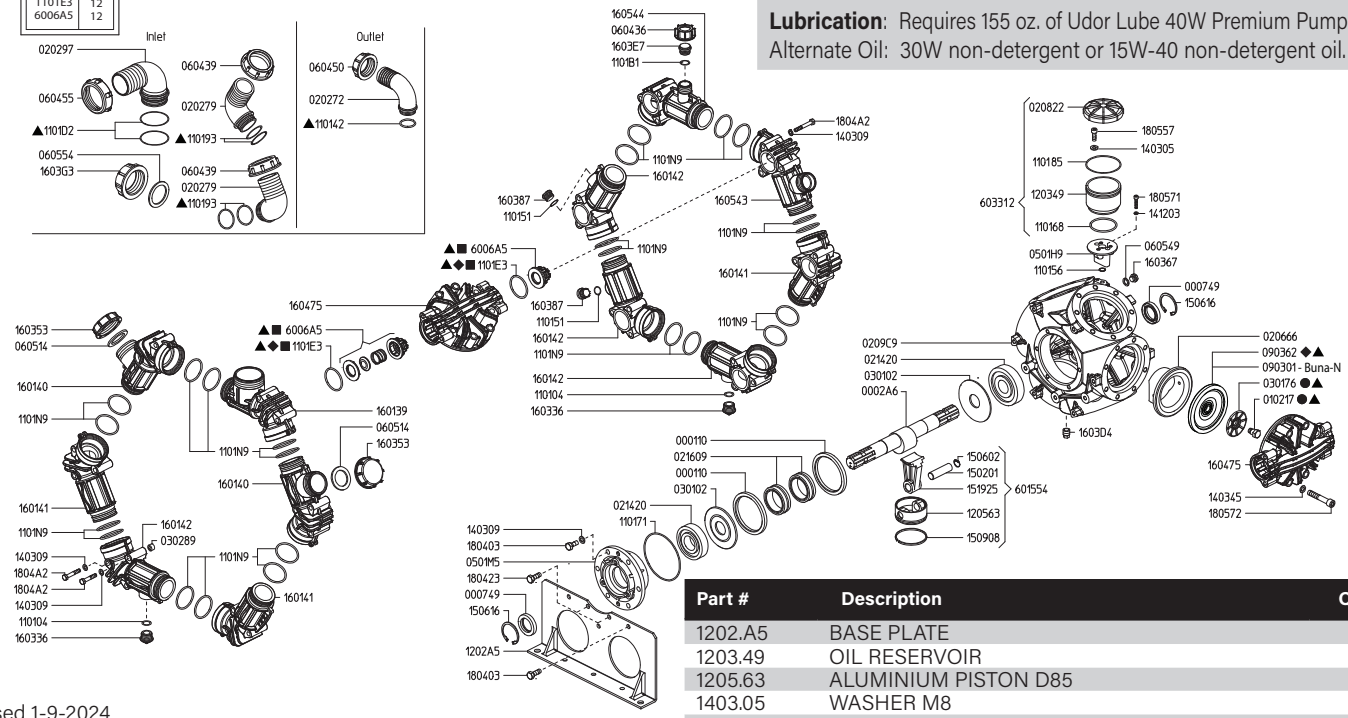

Revised 1-9-2024

Part #	Description	Qty
0001.10	RETAINER RING	2
0002.A6	CRANKSHAFT TS 2C	1
0007.49	OIL SEAL D35	2
0102.17	DIAPHRAGM BOLT ●▲	6
0202.72	DISCHARGE HOSE BARB D40	1
0202.79	INLET HOSE BARB D50	2
0202.97	INLET HOSE BARB D60	1
0206.66	SLEEVE D85	6
0208.22	OIL RESERVOIR CAP	1
0209.C9	CRANKCASE	1
0214.20	BALL BEARING D35	2
0216.09	ROLLER BEARING D55	2
0301.02	ROD DISC	2
0301.76	DIAPHRAGM WASHER●▲	6
0302.89	SPACER	6
0501.H9	OIL CUP SUPPORT FLANGE	1
0501.M5	BEARING FLANGE	1
0604.36	BARB NUT G1"	1
0604.39	BARB NUT G2"	2
0604.50	BARB NUT G1-1/2"	1
0604.55	BARB NUT G2-1/2"	1
0605.14	GASKET D40	2
0605.49	GASKET D13	1
0605.54	GASKET D55	1
0903.01	PISTON DIAPHRAGM - BUNA-N 130MM	6
0903.62	PISTON DIAPHRAGM - GREENTECH 130MM■▲	6
1101.04	O-RING - PLUG	2
1101.42	O-RING - OUTLET HOSE BARB▲	1
1101.51	O-RING - PLUG	2
1101.56	O-RING - OIL RESERVIOR	1
1101.68	O-RING - OIL RESERVIOR	1
1101.71	O-RING - BEARING FLANGE	1
1101.85	O-RING - OIL RESERVOIR	1
1101.93	O-RING - INLET HOSE BARB▲	4
1101.B1	O-RING - PLUG	1
1101.D2	O-RING - INLET HOSE BARB▲	2
1101.E3	O-RING - VALVE ◆■▲	12
1101.N9	O-RING - MANIFOLD TUBE	24

Part #	Description	Qty
1202.A5	BASE PLATE	2
1203.49	OIL RESERVOIR	1
1205.63	ALUMINIUM PISTON D85	6
1403.05	WASHER M8	3
1403.09	WASHER M10	42
1403.45	WASHER M13	48
1412.03	BONDED WASHER M6	2
1502.01	PIN D18X64	6
1506.02	SNAP RING D18	6
1506.16	SNAP RING D55	2
1509.08	PISTON RING D85	6
1519.25	CONNECTING ROD	6
1601.39	SUCTION MANIFOLD G2"1/2 M	1
1601.40	SUCTION MANIFOLD G2" M	2
1601.41	INLET-OUTLET MANIFOLD	3
1601.42	INLET-OUTLET MANIFOLD G3/4 F	4
1603.36	PLUG G3/4	2
1603.53	PLUG G2" F	2
1603.67	PLUG G1/4	1
1603.87	PLUG G3/4	2
1603.D4	PLUG G3/8	1
1603.E7	PLUG	1
1603.G3	PLUG G2"1/2 F	1
1604.75	HEAD	6
1605.43	OUTLET MANIFOLD G1"1/2 M	1
1605.44	OUTLET MANIFOLD G1" M	1
1804.03	HEX BOLT M10X30	10
1804.23	HEX BOLT M10X40	4
1804.A2	HEX BOLT M10X75	36
1805.57	ALLEN BOLT M8X22	3
1805.71	ALLEN BOLT M6X50	2
1805.72	ALLEN BOLT M12X75	48
6006.A5	VALVE ASSEMBLY W/O O-RING ■▲	12
6015.54	ROD ASSEMBLY - D85 PISTON	6
6033.12	OIL RESERVOIR ASSEMBLY	1
6062.F9	IN/OUTLET VALVE KIT (KIT 660)	1
6062.G1	DIAPHRAGM KIT - GREENTECH (KIT 661)	1
6062.G2	DIAPHRAGM BOLT & WASHER (KIT 662)	1
8700.43CK	COMPLETE REPAIR KIT	1

■ Parts in 6062.F9 (Kit 660)
◆ Parts in 6062.G1 (Kit 661)
● Parts in 6062.G2 (Kit 662)
▲ Parts in 8700.43CK Repair Kit

ZETA 350/400 DIMENSIONS

All Dimensions are WITHOUT Control Unit or Regulator

Dimensional Drawings are Shown in Millimeters. To Convert to Inches, Multiply Dimension x 0.03937

Specifications	ZETA 350	ZETA 400
Inlet Ports - Hose Barb	2" & 2-1/2" HB	2" & 2-1/2" HB
Outlet Ports - Hose Barb	(2)1-1/2" HB	(2)1-1/2" HB
Dimensions	20.5"L x 14.5"W x 23"H	
Diaphragm Material	GREENTECH (Std) Buna-N (Opt)	

Lubrication: Requires 39 oz. of Udor Lube 40W Premium Pump Oil. Alternate Oil: 30W non-detergent or 15W-40 non-detergent oil.

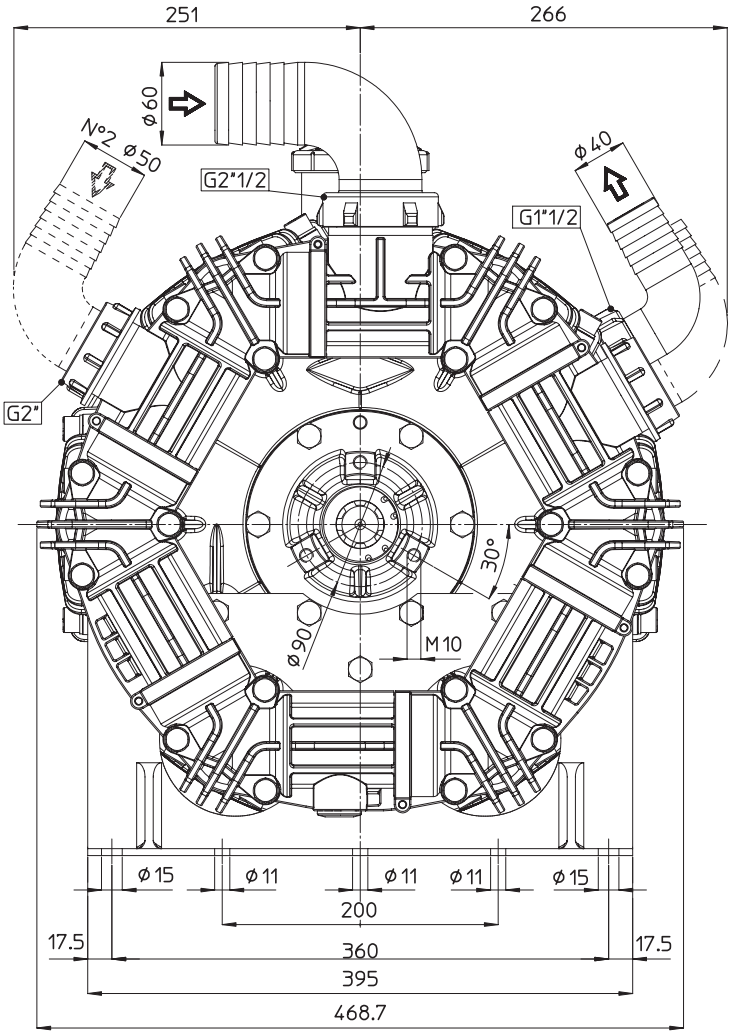

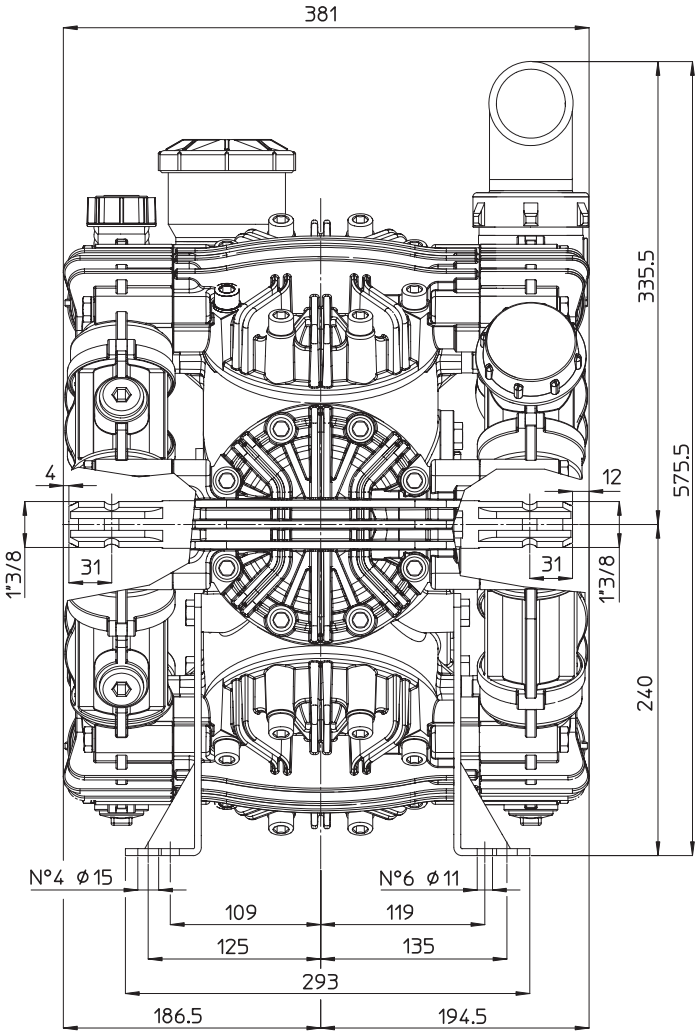

TORQUE SPECS
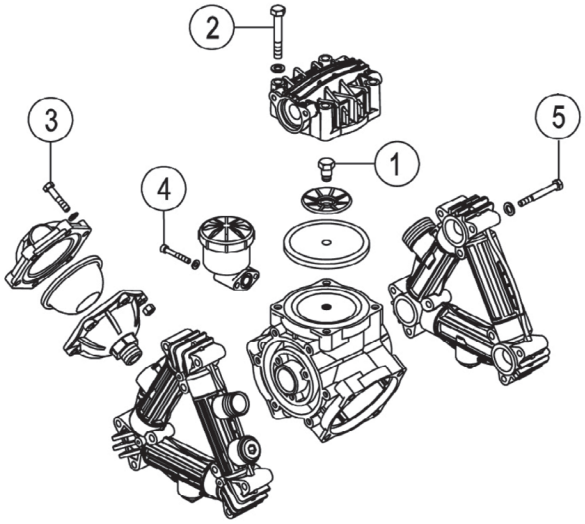
Ref.	Description	Ft./lb.	Nm
1	**Diaphragm Bolts** (Use Loctite 243)	22	30
2	**Head Bolts**	30	40
3	**Pulsation Dampener Bolts**	18	25
4	**Oil Cup Bolts**	6	8
5	**Manifold Bolts (Plastic)**	14	20
NS	**Bearing Flange Bolts** (not shown)	25	34