ST3002

HIGH PRESSURE TRIGGER SPRAY GUN

Maximum Flow	25.0 GPM / 94.8 lpm
Maximum Pressure	8700 PSI / 600 bar
Inlet	1/2" NPT Female
Outlet	1/2" NPT Female

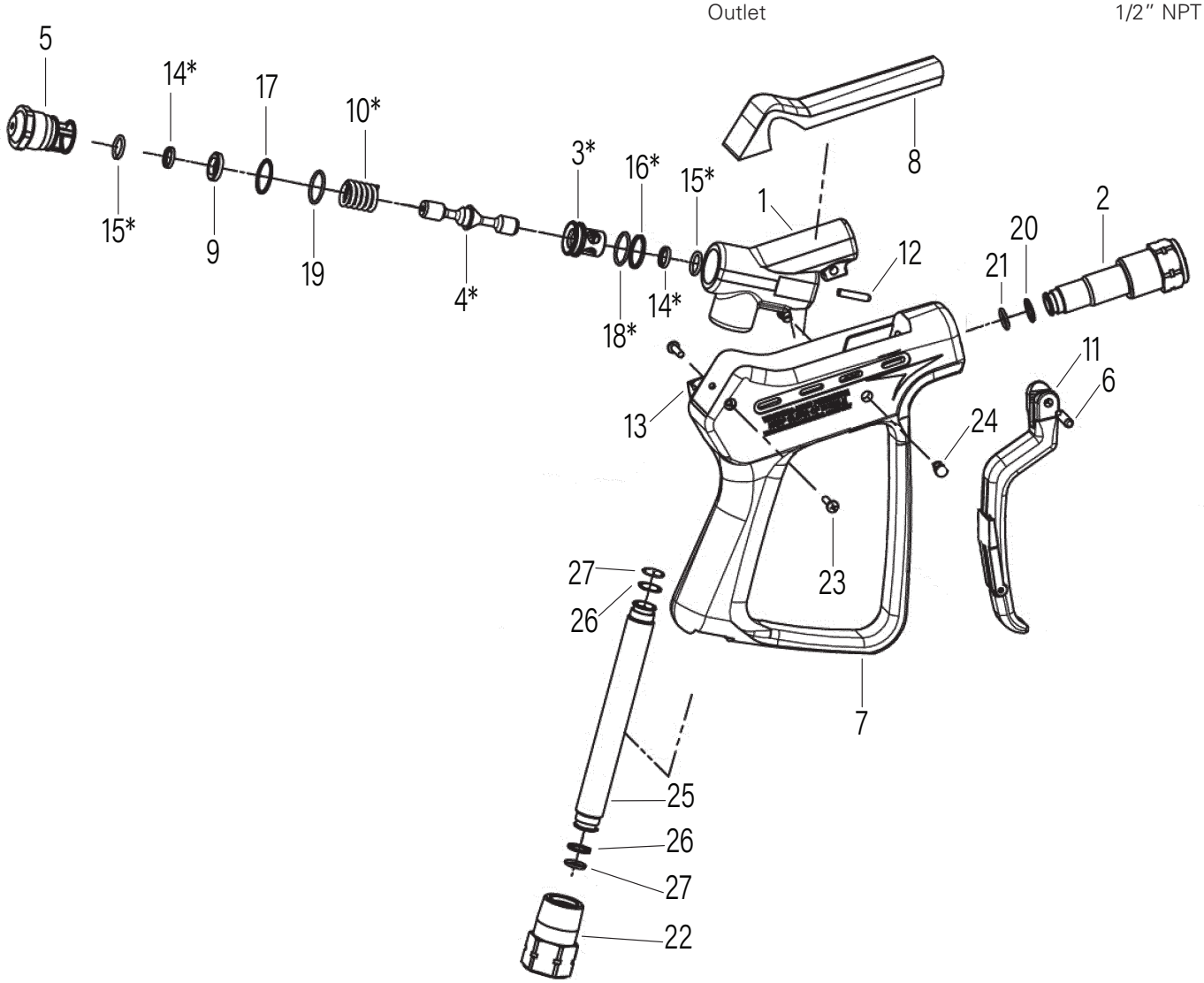

Revised 3-6-2023

Ref #	Part #	Description
1	04 0001 310	STAINLESS HOUSING
2	04 0006 805	OUTLET- NUT G1/2NPT FEMALE
3*	04 0000 512	SEAL HUB
4*	04 0000 495	VALVE CONE
5	04 0002 257	SEALING CAP
6	04 0000 060	PIN 5X20
7	02 0001 126	PLASTIC HOUSING
8	02 0001 151	PLASTIC COVER
9	04 0002 258	SEALING PLATE
10*	06 0000 525	SPRING
11	06 ST3002T	TRIGGER WITH SAFETY PIN
12	04 0007 045	POSITION PIN
13	02 0001 110	LABEL
14*	05 0000 967	GASKET RING

Ref #	Part #	Description
15*	05 0000 300	O-RING 10.82 X 1.78
16*	05 0000 960	BACK UP RING
17	05 0001 026	BACK RING
18*	05 0001 021	O-RING 17 X 1.5
19	05 0001 025	O-RING 18 X 1.5
20	05 0000 126	SUPPORT RING 11.8 X 14 X 1
21	05 0001 521	O-RING 10X1.5
22	04 0006 905	INLET- NUT G1/2NPT FEMALE
23	04 0000 051	SCREW 3.5X16
24	02 0001 181	BLIND PLUG
25	04 0005 532	INLET PIPE
26	05 0000 126	SUPPORTING RING 11.8 X 14 X 1
27	05 0001 521	O-RING 10 X 1.5
*	ST3002K	REPAIR KIT