CHC SERIES

Gear Reduction, Gas Engine Models

1" or 1-1/8" Hollow Shaft, SAE J609-B Flange.
2.2:1 Gear Reduction Drive

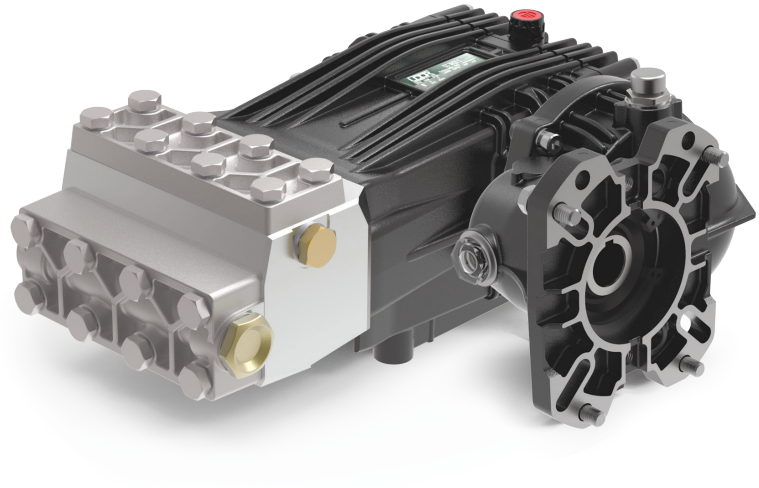

- Solid Ceramic Plungers
- Stainless Steel Check Valves
- Stainless Steel Block Manifold with Nickel Plated Valve Covers
- Deeper Back Cover for Increased Oil Capacity
- 34.5 oz. Capacity Vented Oil Bath Crank Case
- 3/4" BSP-F Inlet. 3/8" BSP-F Outlet
- Max Fluid Temp, 160°F

CHC Series Gas Engine, Gear Reduction Drive Plunger Pumps

CHC Series super duty plunger pumps include a wide range of models with flow rates from 3.2 to 5.3 GPM and pressures up to 7250 PSI.

Other drive options include a 24mm solid, keyed shaft.

Applications include general pressure cleaning,, construction, hydro-excavation and oil field applications.

	Model	Flow		Pressure		Plunger Dia.	Crankshaft		Power	Seal Kit	Valve Kit	Wt.
		GPM	l/min	PSI	bar		Stroke	Code				
Gear Reduction	CHC 12/50 GR	3.2	12.0	7250	500	15mm	17.0mm	X	20.0 HP Gas	6061.88	6061.G1	59 lbs
	CHC 16/50 GR	4.2	16.0	7250	500	15mm	22.0mm	1	26.0 HP Gas	6061.88	6061.G1	59 lbs
	CHC 20/50 GR	5.3	20.0	7250	500	18mm	19.0mm	Y	34.0 HP Gas	6061.G2	6061.G1	59 lbs

NOTE: *All models available with 1" or 1-1/8" Hollow Shafts . Specify size when ordering (ex.* ***CHC 12/50 GR1*** *or* ***CHC 12/50 GR1-1/8.****)*

UDOR USA
World Leader in Diaphragm and Plunger Pumps

An UDOR Brand
BOOMINATOR
BOOMLESS SPRAY NOZZLES

6180 140th Avenue NW
Ramsey, MN 55303

Ph: 651-785-0666
Fax: 800-732-2670

www.udorusa.com
www.boominator.com
info@udorusa.com

Scan this QR Code for More Information

CHC-GR 2024A

CHC 16/50 GR

MAX FLOW	4.2 GPM / 16.0 L/MIN
MAX PRESSURE	7250 PSI / 500 BAR
RATED PUMP SPEED	1450 RPM
POWER REQUIREMENT	26.0 HP GAS
LUBRICATION	34.5 OZ UDOR LUBE

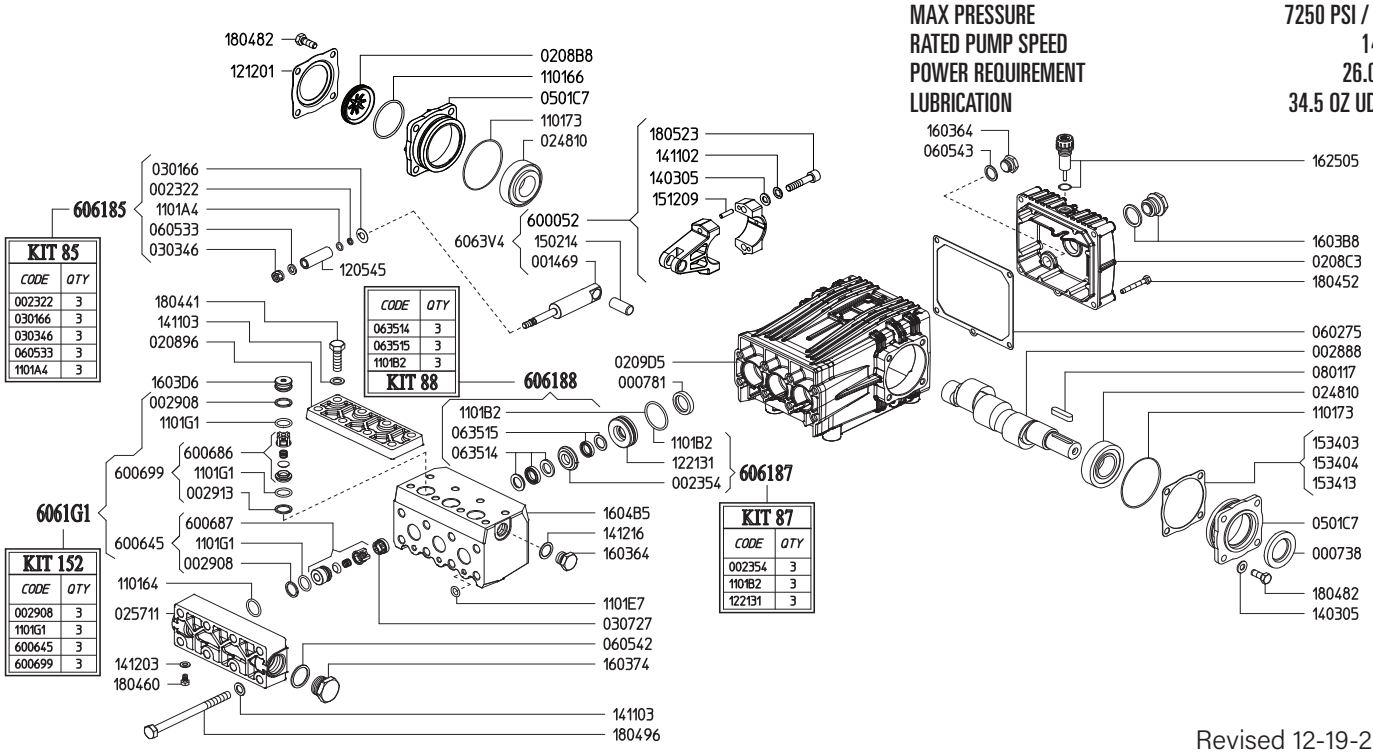

Revised 12-19-2023

Part #	Description	Qty
0007.38	OIL SEAL D30	1
0007.81	OIL SEAL D20	3
0014.69	PLUNGER GUIDE D15 "CH"	3
0023.22	RING D6.3 [B]	3
0023.54	UPPER RING D15 [D]	3
0028.88	MALE SHAFT D24	1
0029.08	RING [A]	3
0029.08	RING [A] / PART OF 6006.45	3
0029.13	RING [A] / PART OF 6006.99	3
0208.96	COVER "CH"	1
0208.B8	OIL SIGHT GLASS	1
0208.C3	BACK COVER "C/CK"	1
0209.D5	GRANKCASE "C/CK/CH"	1
0248.10	ROLLER BEARING D30	2
0257.11	SUCTION MANIFOLD	1
0301.66	SLINGER RING [B]	3
0303.46	NUT D15 [B]	3
0307.27	SPACER	3
0501.C7	BEARING HOLLOW FLANGE	2
0602.75	BACK COVER GASKET	1
0605.33	GASKET D8 [B]	3
0605.42	GASKET D27	1
0605.43	GASKET D17	1
0635.14	HIGH PRESSURE SEAL KIT D15 [C]	3
0635.15	LOW PRESSURE SEAL KIT D15 [C]	3
0801.17	KEY A8X7X35	1
1101.64	O-RING - SUCTION MANIFOLD	3
1101.66	O-RING - OIL SIGHT GLASS	1
1101.73	O-RING - BEARING FLANGE	2
1101.A4	O-RING - PLUNGER [B]	3
1101.B2	O-RING - PRESSURE RING [C D]	3
1101.E7	O-RING - SPLLIT MANIFOLD	3
1101.G1	O-RING - VALVE [A]	3
1101.G1	O-RING - VALVE [A] / in 6006.99	3
1101.G1	O-RING - VALVE [A] / in 6006.45	3
1205.45	CERAMIC PLUNGER D15	3
1212.01	RETAINER - OIL SIGHT GLASS	1

Part #	Description	Qty
1221.31	PRESSURE RING D15 [D]	3
1403.05	WASHER D8.4	10
1411.02	SERRATED WASHER D8	6
1411.03	SERRATED WASHER D10	16
1412.03	BONDED WASHER D6.7	1
1412.16	BONDED WASHER D17.3	1
1502.14	PIN D14X32	3
1512.09	PLUG D5X20 UNI1707	6
1534.03	SHIM 0.1 MM	-
1534.04	SHIM 0.2 MM	-
1534.13	SHIM 0.05 MM	-
1603.64	PLUG G3/8	2
1603.74	PLUG G3/4	1
1603.B8	OIL PLUG G3/4 + GASKET	1
1603.D6	PLUG	3
1604.B5	HEAD PISTON D15 SS	1
1625.05	OIL PLUG G3/8	1
1804.09	HEX BOLT M8X40	6
1804.41	HEX BOLT M10X35	8
1804.52	HEX BOLT M6X45	5
1804.60	HEX BOLT M6X10	1
1804.82	HEX BOLT M8X22	8
1804.96	HEX BOLT M10X140	8
6000.52	ROD ASSEMBLY	3
6006.45	SUCTION VALVE ASS'Y COMPLETE [A]	3
6006.86	OUTLET VALVE ASS'Y W/O O-RING [A] / in 6006.99	3
6006.87	SUCTION VALVE ASS'Y W/O O-RING [A] / in 6006.45	3
6006.99	OUTLET VALVE ASS'Y COMPLETE [A]	3
6061.85	PLUNGER KIT D15 (KIT 85)	
6061.87	BRASS RING KIT D15 (KIT 87)	
6061.88	WATER SEAL KIT (KIT 88)	
6061.G1	VALVE KIT D18 (KIT 152)	

[A] Parts in 6061.G1 (Kit 152).
[B] Parts in 6061.85 (Kit 85).
[C] Parts in 6061.88 (Kit 88).
[D] Parts in 6061.87 (Kit 87).

-

5119.H3

GAS ENGINE GEAR REDUCTION FOR B/BK/MS/MWT/C/CS/CWT/CK/CX-SERIES PLUNGER PUMPS on GAS ENGINES with 1" SHAFTS

REQUIRES 9.0 OZ. 90W GEAR LUBE

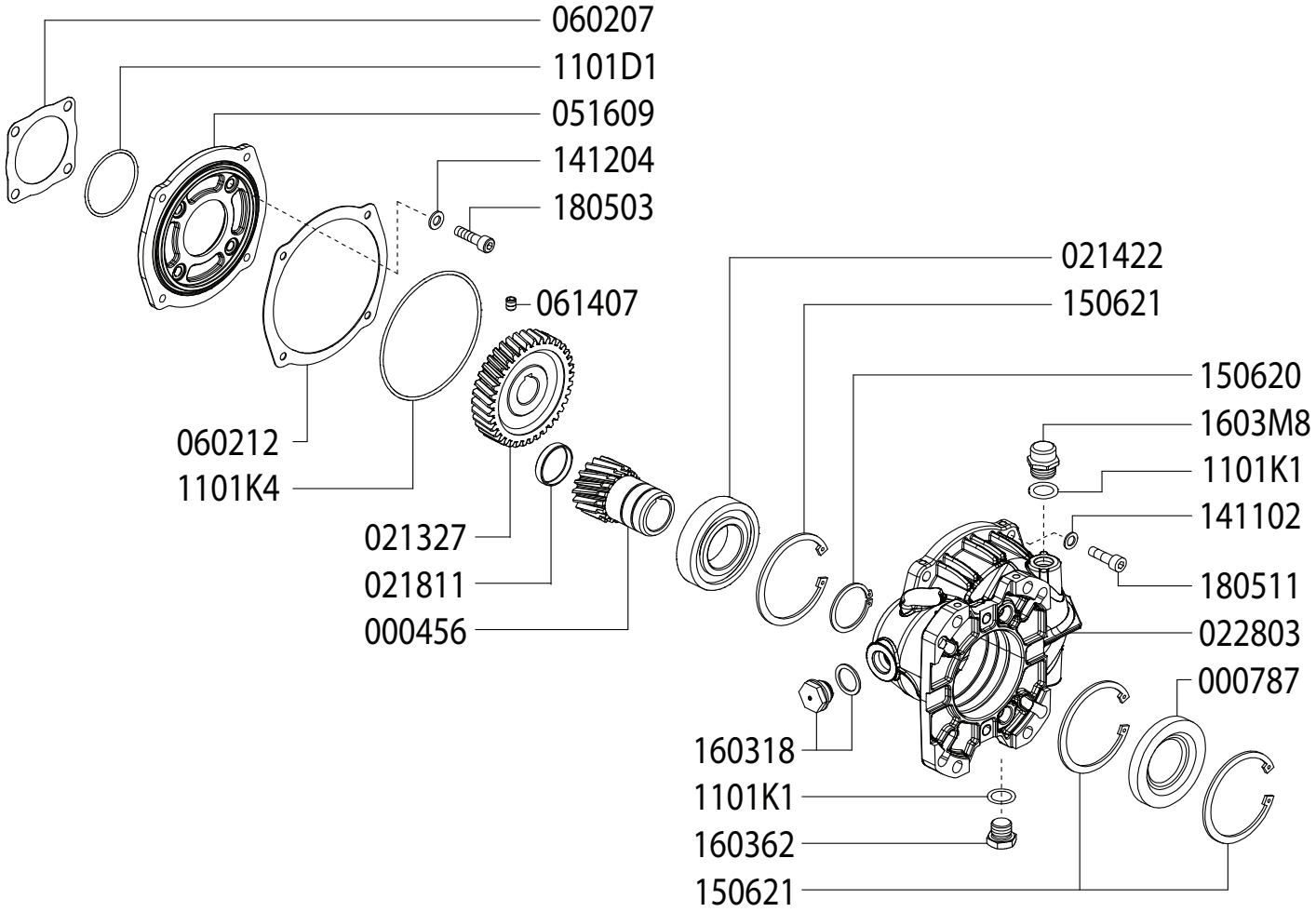

Revised 12-19-2023

Part #	Description	Qty
0004.56	GEAR SHAFT "RC122" 1"	1
0007.87	SEAL	1
0213.27	GEAR "RM122" IP	1
0214.22	BALL BEARING D40 "RC122K"	1
0218.11	CAP - D37X7	1
0228.03	COUPLER "RC122"	1
0516.09	FLANGE "RC122"	1
0602.07	GASKET "RC122"	1
0602.12	GASKET "RC122" SPLIT BODY	1
0614.07	SET SCREW M8X10 UNI5929	1
1101.D1	O-RING - RC122 FLANGE - OUTSIDE	1
1101.K1	O-RING - OIL PLUG / OIL CAP	2

Part #	Description	Qty
1101.K4	O-RING - RC122 FLANGE - INSIDE	1
1403.05	WASHER D8,4	4
1411.02	SERATED WASHER D8	4
1412.04	BONDED WASHER D8.3	4
1506.20	SNAP RING D40	1
1506.21	SNAP RING D80	3
1603.18	OIL PLUG G1/2 + GASKET	1
1603.62	PLUG G1/2	1
1603.M8	OIL CAP - RC122	1
1805.03	ALLEN SCREW M8X30	4
1805.11	ALLEN SCREW M8X25	4

5120.H2

GAS ENGINE GEAR REDUCTION FOR B/BK/MS/MWT/C/CS/CWT/CK/CX-SERIES PLUNGER PUMPS on GAS ENGINES with 1-1/8" SHAFTS

REQUIRES 9.0 OZ. 90W GEAR LUBE

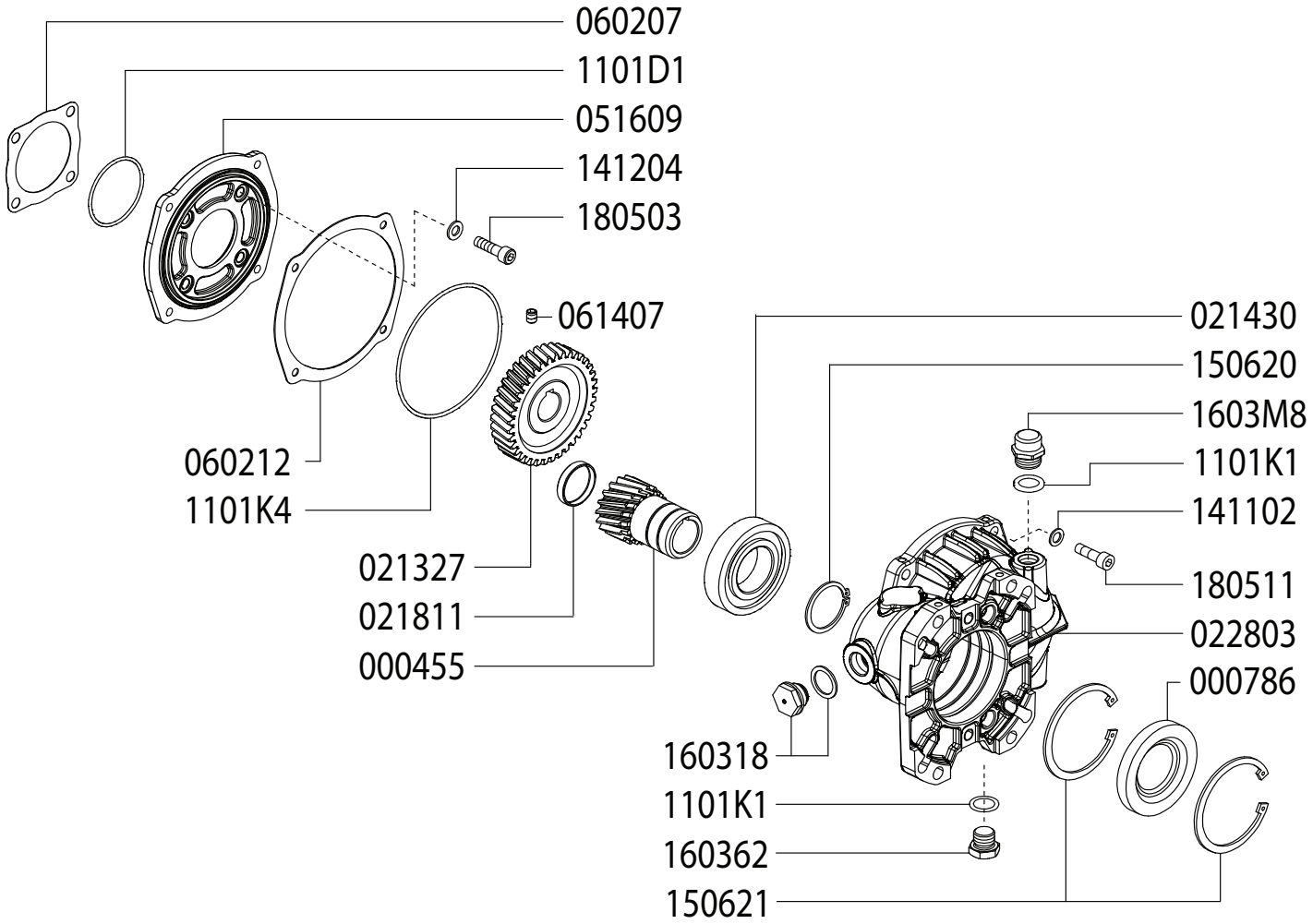

Revised 12-19-2023

Part #	Description	Qty
0004.55	GEAR SHAFT "RC122" 1-1/8"	1
0007.86	SEAL	1
0213.27	GEAR "RM122" IP	1
0214.30	BALL BEARING D40 "RC122X"	1
0218.11	CAP - D37X7	1
0228.03	COUPLER "RC122"	1
0516.09	FLANGE "RC122"	1
0602.07	GASKET "RC122"	1
0602.12	GASKET "RC122" SPLIT BODY	1
0614.07	SET SCREW M8X10 UNI5929	1
1101.D1	O-RING - RC122 FLANGE - OUTSIDE	1
1101.K1	O-RING - OIL PLUG / OIL CAP	2

Part #	Description	Qty
1101.K4	O-RING - RC122 FLANGE - INSIDE	1
1403.05	WASHER D8,4	4
1411.02	SERATED WASHER D8	4
1412.04	BONDED WASHER D8.3	4
1506.20	SNAP RING D40	1
1506.21	SNAP RING D80	2
1603.18	OIL PLUG G1/2 + GASKET	1
1603.62	PLUG G1/2	1
1603.M8	OIL CAP - RC122	1
1805.03	ALLEN SCREW M8X30	4
1805.11	ALLEN SCREW M8X25	4

CH SERIES DIMENSIONS

WEIGHT	49 LBS
LUBRICATION	34.5 OZ UDOR LUBE

Dimensional Drawings are Shown in Millimeters. To Convert to Inches, Multiply Dimension x 0.03937

CH SERIES PUMPS - 24mm SOLID SHAFT

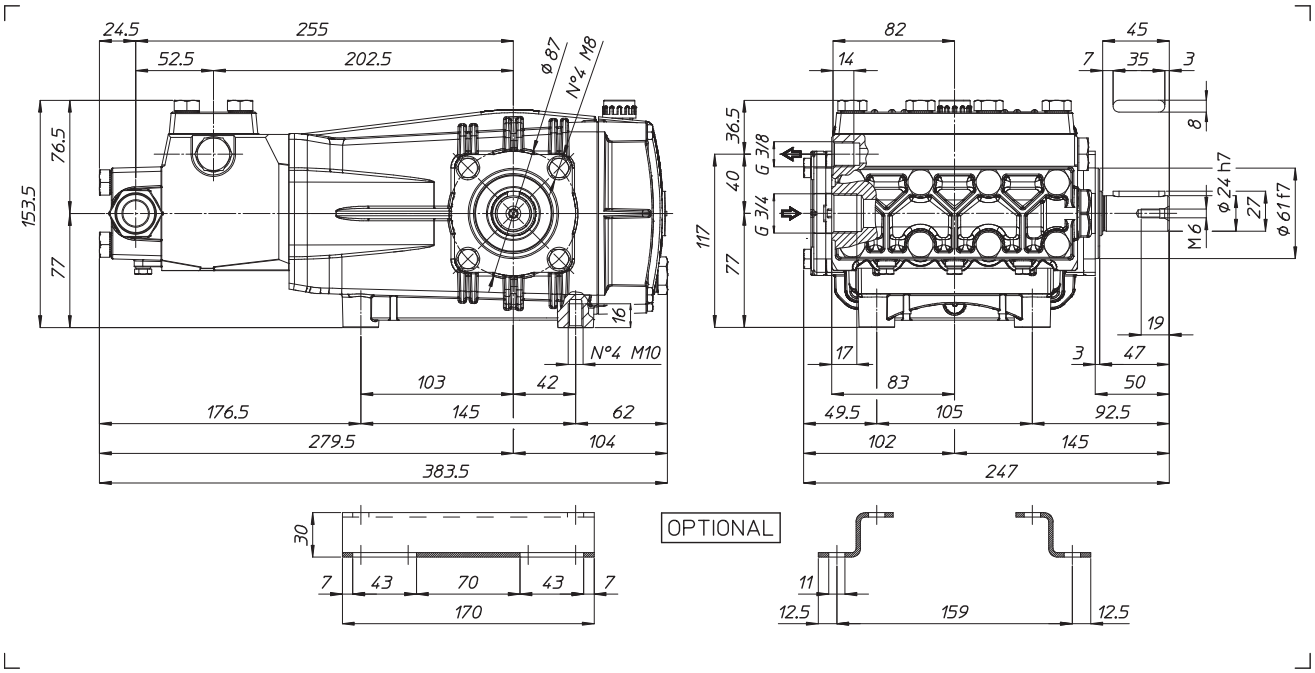

TORQUE SPECS
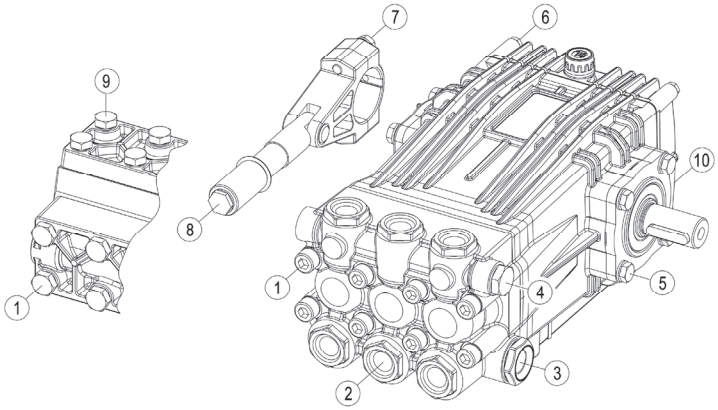
Ref.	Description	Ft./lb.	Nm	Loctite®
1	Head Bolts	37	50	-
2	Valve Caps	-	-	-
3	Inlet Cap	103	140	-
4	Outlet Cap	60	80	243
5	Bearing Flange Bolts	19	25	-
6	Rear Cover Bolts	8	11	-
7	Connecting Rod Bolts	19	25	270
8	Plunger Bolts	15	20	270
9	Valve Cover Bolts	37	50	-
10	Oil Drain Plug	8	11	-