VY-C 19/1000 R

MAX FLOW	4.9 GPM / 19 L/MIN
MAX PRESSURE	14500 PSI / 1000 BAR
RATED PUMP SPEED	1450 RPM
POWER REQUIREMENT	48.0 HP ELECTRIC
LUBRICATION	128 OZ UDOR LUBE

6062E9 KIT 651 ■		6062F2 KIT 653 ▲		6062F3 KIT 654 ◆		6062G8 KIT 667 ●		6062G9 KIT 668 ▼	
CODE	QTY	CODE	QTY	CODE	QTY	CODE	QTY	CODE	QTY
000757	1	002384	3	120132	3	063535	3	002391	3
000766	3	002916	3	120133	3			122167	3
060234	1	110168	6	150185	3				
060543	2	1101E7	3						
110101	4	1101L8	3						
		1101M9	3						

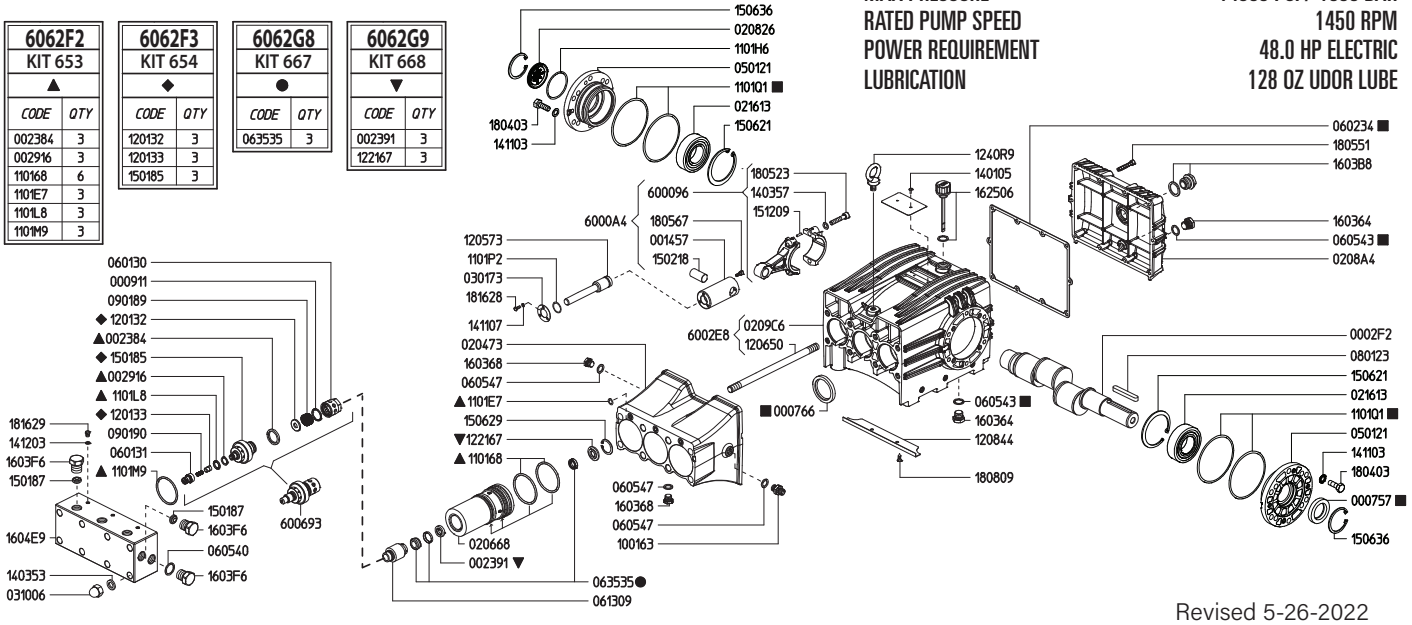

Revised 5-26-2022

Part #	Description	Qty
0002.F2	SHAFT "VX/VY"	1
0007.57	OIL SEAL D40 ■	1
0007.66	OIL SEAL D42 ■	3
0009.11	STOP RING "VY"	3
0014.57	PLUNGER GUIDE "VY"	3
0023.84	VALVE SEAL RING "VY" ▲	3
0023.91	UPPER RING D12 "VY" ▼	3
0029.16	RING D13.6 "VY" ▲	3
0204.73	COOLING SYSTEM BODY "VY"	1
0206.68	SLEEVE D12/D14 "VY"	3
0208.26	OIL SIGHT GLASS	1
0208.A4	BACK COVER "GAMMA 3P/VX/VY"	1
0209.C6	CRANKCASE "VH/VY"	1
0216.13	BEARING D40	2
0301.73	DISC "VY"	3
0310.06	NUT M14 "VY"	8
0501.21	BEARING FLANGE	2
0601.30	VALVE CAGE INLET "VY"	3
0601.31	VALVE CAGE OUTLET "VY"	3
0602.34	BACK COVER GASKET "GAMMA 3P/VX/VY"■	1
0605.40	GASKET D21.5	1
0605.43	GASKET D17 ■	2
0605.47	GASKET D13	4
0613.09	PLUNGER BUSHING D12 "VY"	3
0635.35	HIGH/LOW PRESS. WATER SEALS D12 "VY" ●	3
0801.23	KEY A10X8X70 UNI6604	1
0901.89	INLET VALVE SPRING "VY"	3
0901.90	OUTLET VALVE SPRING "VY"	3
1001.63	NIPPLE G1/4 M X G1/4 M	2
1101.68	O-RING D60.32 (RIF.164) ▲	3
1101.E7	O-RING D9.92 (RIF.112) ▲	3
1101.Q1	O-RING - OIL SIGHT GLASS	1
1101.L8	O-RING D13.15 ▲	3
1101.M9	O-RING D50.47 (RIF.3200) 90SHORE ▲	3
1101.P2	O-RING D20	3
1101.Q1	O-RING - BEARING FLANGE ■	4
1201.32	VALVE PLATE INLET "VY" ◆	3
1201.33	VALVE PLATE OUTLET "VY" ◆	3
1205.73	PLUNGER D12 "VY"	3
1206.50	STUD M14	8
1208.44	PLATE "VY"	1

Part #	Description	Qty
1221.67	PRESSURE RING D12 "VY" ▼	3
1240.R9	LIFTING HOOK M10 UNI-ISO3266	1
1401.05	RIVET UNI7346-3.5X8	2
1403.53	WASHER D15	8
1403.57	WASHER D8.4	6
1411.03	SERRATED WASHER D10	8
1411.07	SERRATED WASHER D5	9
1412.03	BONDED WASHER D6.7	3
1501.85	VALVE SEAT "VY" ◆	3
1501.87	CONICAL SEAT "VY"	4
1502.18	PIN D20X34	3
1506.21	SNAP RING D80	2
1506.29	SNAP RING D32	3
1506.36	SNAP RING D55	2
1512.09	PLUG D5X20	6
1603.64	PLUG G3/8	2
1603.68	PLUG G1/4	2
1603.B8	OIL PLUG G3/4 + GASKET	1
1603.F6	PLUG G1/2 SS	5
1604.E9	HEAD "VY" SS	1
1625.06	OIL PLUG G1/2 "VX/GAMMA-IL 3P"	1
1804.03	HEX BOLT M10X30	8
1805.23	ALLEN BOLT M8X40	6
1805.51	ALLEN BOLT M6X40	10
1805.67	ALLEN BOLT M5X12	3
1808.09	SELF-THREADING SCREW D5.5X13 DIN7981	2
1816.28	HEX BOLT M5X12 SS	9
1816.29	HEX BOLT M6X10 SS	3
6000.96	ROD ASSY "VX/VH/VY" BRONZE	3
6002.E8	CRANKCASE ASSEMBLY "VY"	1
6062.E9	POWER END OIL SEAL + GASKET (KIT 651)	
6062.F2	FLUID END O-RING KIT (KIT 653)	
6062.F3	VALVE KIT "VY" (KIT 654)	
6062.G8	HIGH + LOW PRESS WATER SEALS D12 (KIT 667)	
6062.G9	BRASS RING KIT D12 "VY" (KIT 668)	

■ Parts in 6062.E9 (Kit 651).
▲ Parts in 6062.F2 (Kit 653).
◆ Parts in 6062.F3 (Kit 654).
● Parts in 6062.G8 (Kit 667).
▼ Parts in 6062.G9 (Kit 668).

VY SERIES DIMENSIONS

WEIGHT	136 LBS
LUBRICATION	128 OZ UDOR LUBE

Dimensional Drawings are Shown in Millimeters. To Convert to Inches, Multiply Dimension x 0.03937
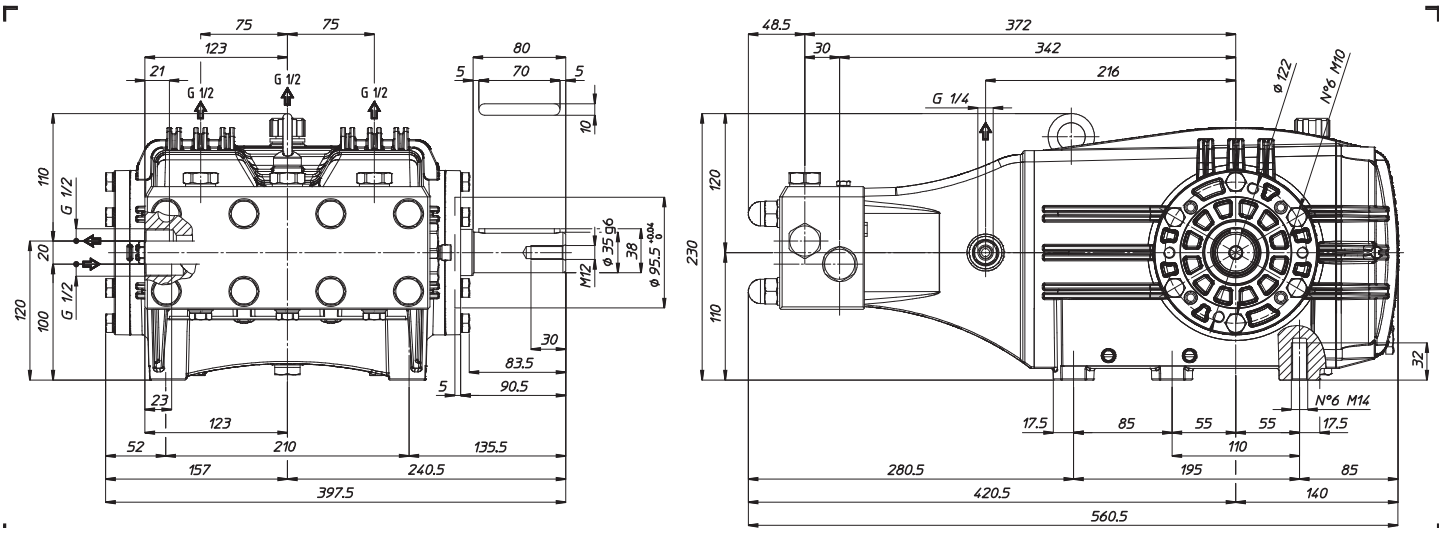
VY SERIES PUMPS - 35mm SOLID SHAFT