PNC 09/11 S

MAX FLOW	2.4 GPM / 9.0 L/MIN
MAX PRESSURE	1595 PSI / 110 BAR
RATED PUMP SPEED	1450 RPM
POWER REQUIREMENT	2.5 HP ELECTRIC
LUBRICATION	14 OZ UDOR LUBE

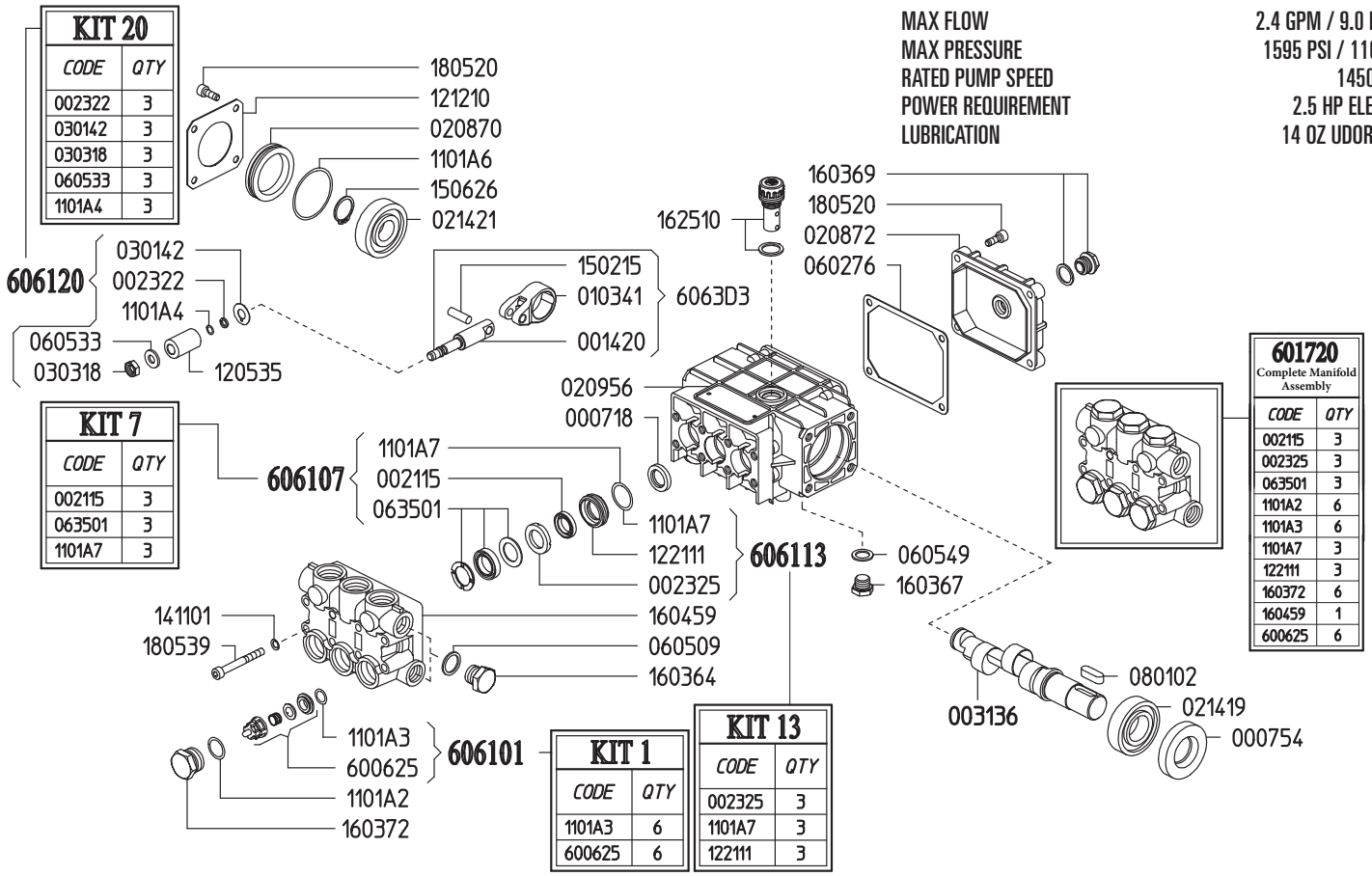

Revised 12-22-2021

Part #	Description	Qty
0007.18	OIL SEAL D15X24X5	3
0007.54	OIL SEAL D25X52X10	1
0014.20	PLUNGER GUIDE D15/18 “PN”	3
0021.15	WATER SEAL LP. D15 [B E]	3
0023.22	RING D6.3X9X1.3 2021 “PN/C/G” [C E]	3
0023.25	INTERMEDIATE RING D15 “PN”	3
0031.36	MALE SHAFT “PN” D24	1
0103.41	CONNECTING ROD “PN/PS”	3
0208.70	COVER “PN”	1
0208.72	BACK COVER “PN”	1
0209.56	CRANKCASE	1
0214.19	BALL BEARING D25X52X15 6205 QL	1
0214.21	BALL BEARING D20X52X15	1
0301.42	SLINGER RING [D]	3
0303.18	NUT M8XH5 [D]	3
0602.76	BACK COVER GASKET	1
0605.09	GASKET D17X23X1.5 (G3/8)	1
0605.33	GASKET D8X14X2 [D]	3
0605.49	GASKET D13X19X1.5	1
0635.01	HIGH PRESS. SEAL ASSY D15 [B E]	3
0801.02	KEY A8X7X25	1
1101.A2	O-RING - VALVE CAP [E]	6
1101.A3	O-RING - VALVE [A E]	6
1101.A4	O-RING - PLUNGER [D]	3
1101.A6	O-RING - BEARING COVER	1

Part #	Description	Qty
1101.A7	O-RING - LP SEAL RETAINER [B C E]	3
1205.35	CERAMIC PLUNGER D15X30 “PN”	3
1212.10	METAL COVER “PN”	1
1221.11	LOW PRESS. SEAL RETAINER D15 [C E]	3
1411.01	SERATED WASHER D6	12
1502.15	PIN D7X25.5	3
1506.26	SNAP RING D20	1
1603.64	PLUG G3/8	1
1603.67	PLUG G1/4	1
1603.69	OIL PLUG G1/4+GASKET	1
1603.72	VALVE PLUG “PN”PISTON D15/18 [A E]	6
1604.59	HEAD “PN” PISTON D15/18	1
1625.10	OIL PLUG G3/8 “PN”	1
1805.20	ALLEN BOLT M6X16	8
1805.39	ALLEN BOLT M6X60	8
6006.25	VALVE ASSEMBLY W/O O-RING [A E]	6
6017.20	COMPLETE MANIFOLD ASSEMBLY	1
6061.01	KIT 1 - VALVE KIT “PN/PW”	1
6061.07	KIT 7 - WATER SEAL KIT D15 “PN/PK”	1
6061.13	KIT 13 - BRASS RING KIT D15 “PN”	1
6061.20	Kit 20 - PLUNGER KIT D15/18 “PN”	1

[A] Parts in 6061.01 (Kit 1).
[B] Parts in 6061.07 (Kit 7).
[C] Parts in 6061.13 (Kit 13).
[D] Parts in 6061.20 (Kit 20).
[E] Parts in 6017.20 (Complete Manifold Assembly).

PN SERIES DIMENSIONS

WEIGHT	12 LBS
LUBRICATION	10 OZ UDOR LUBE

Dimensional Drawings are Shown in Millimeters. To Convert to Inches, Multiply Dimension x 0.03937

PN SERIES PUMPS - 24MM SOLID SHAFT

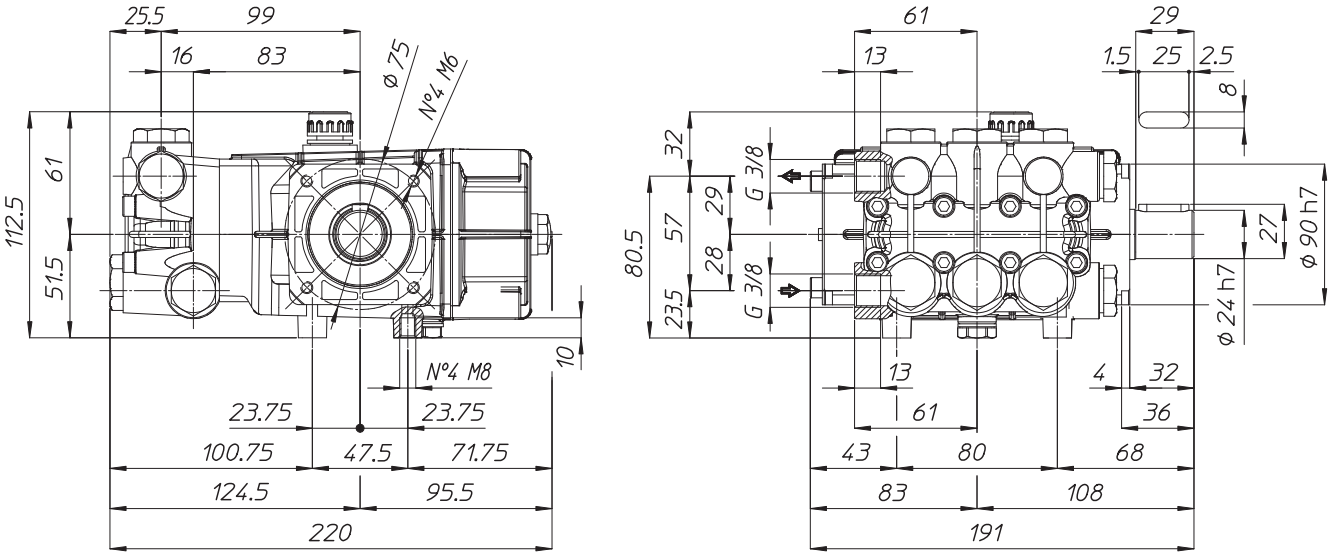

TORQUE SPECS
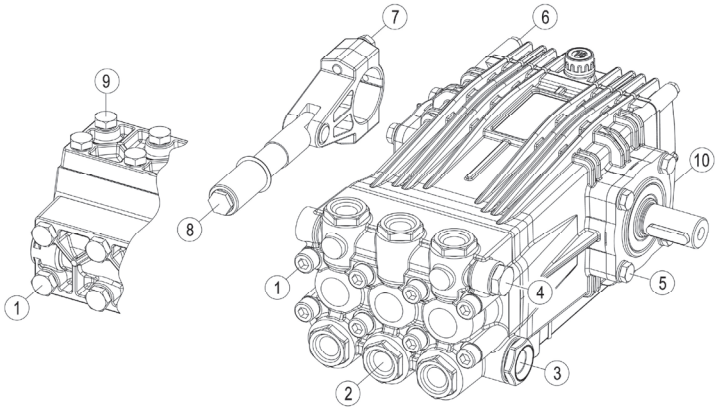
Ref.	Description	Ft./lb.	Nm	Loctite®
1	Head Bolts	8	11	-
2	Valve Caps	75	100	243
3	Inlet Cap	60	80	-
4	Outlet Cap	60	80	243
5	Bearing Flange Bolts	8	11	-
6	Rear Cover Bolts	8	11	-
7	Connecting Rod Bolts	-	-	-
8	Plunger Bolts	11	15	270
9	Valve Cover Bolts	-	-	-
10	Oil Drain Plug	6	8	-