MKC 13/28-S

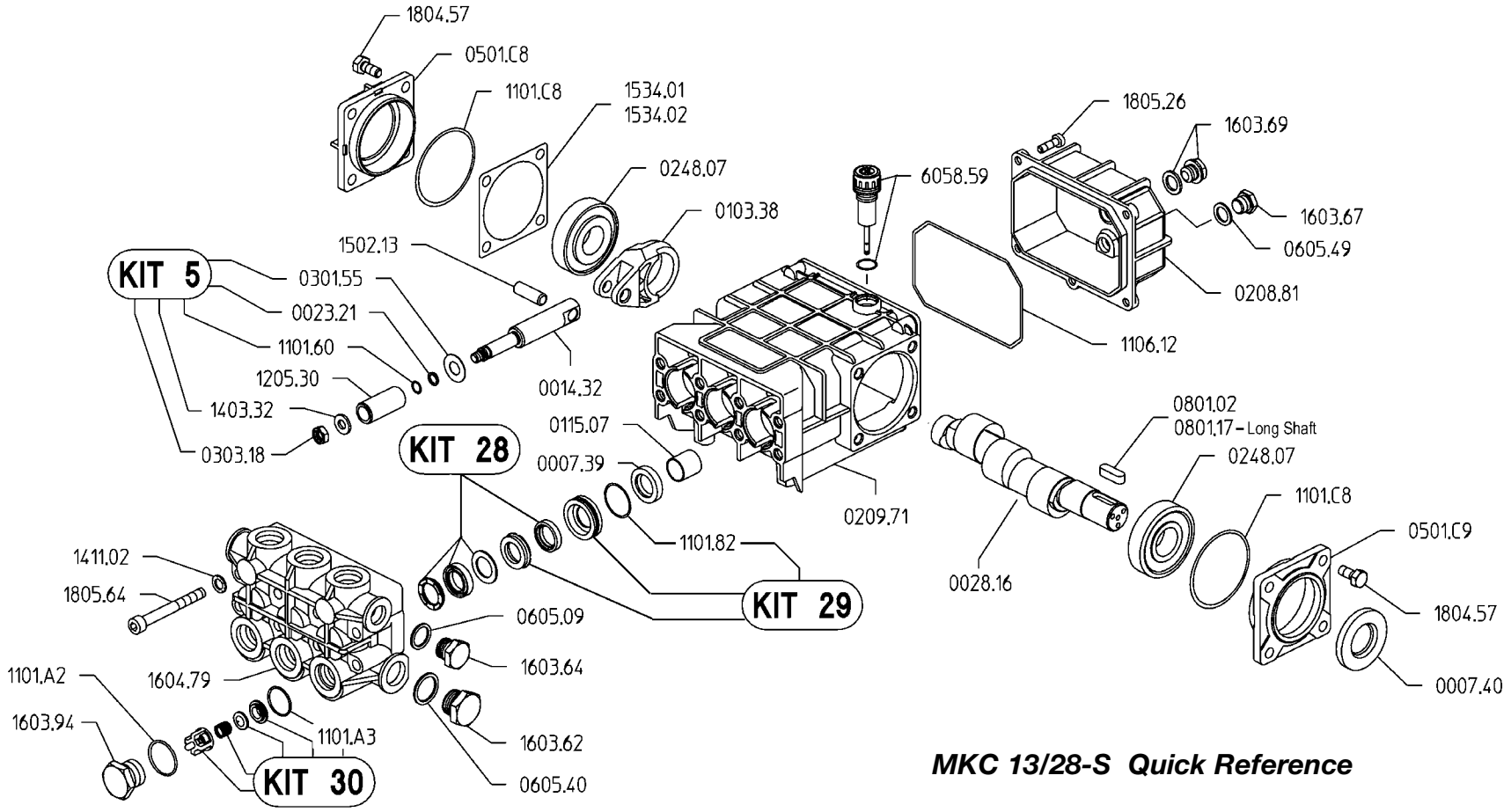

MKC 13/28-S Quick Reference

Maximum Flow .....3.5 GPM	Valve Kit 04-KIT UD-30
Maximum Pressure .....4000 PSI	Seal Kit.....04-KIT UD-28
Rated Pump Speed .....1450 RPM	Brass Kit 04-KIT UD-29
Oil Capacity.....24 oz. UDOR LUBE	Plunger Bolt Kit 04-KIT UD-5
.....or SAE 30W	Plunger Part # 04-1205.30
.....Non-Detergent Oil	Plunger Diameter.....18 MM