Revised 3-1-2003

GKCW 21/14-S

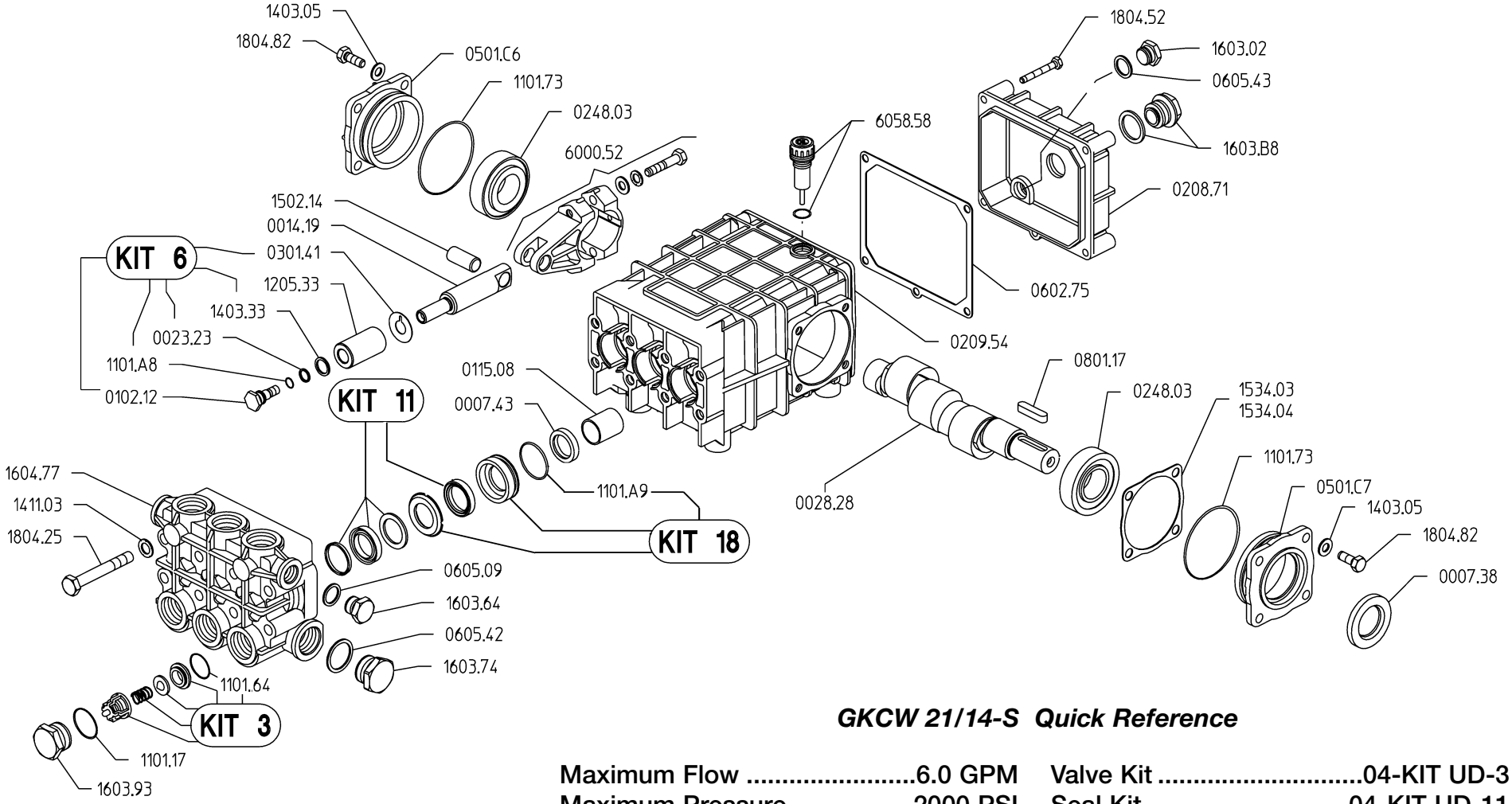

GKCW 21/14-S Quick Reference

Maximum Flow .....6.0 GPM	Valve Kit 04-KIT UD-3
Maximum Pressure .....2000 PSI	Seal Kit.....04-KIT UD-11
Rated Pump Speed .....1100 RPM	Brass Kit 04-KIT UD-18
Oil Capacity.....40 oz. UDOR LUBE	Plunger Bolt Kit 04-KIT UD-6
or SAE 30W	Plunger Part # 04-1205.33
Non-Detergent Oil	Plunger Diameter.....25 MM