NKC 47/350 GR

MAX FLOW	12.5 GPM / 47.1 L/MIN
MAX PRESSURE*	3600 PSI / 240 BAR
RATED PUMP SPEED	1450 RPM
POWER REQUIREMENT	40.0 HP GAS
LUBRICATION	58 OZ UDOR LUBE

* Max Pressure Based on 40 HP Max Gearbox Capacity

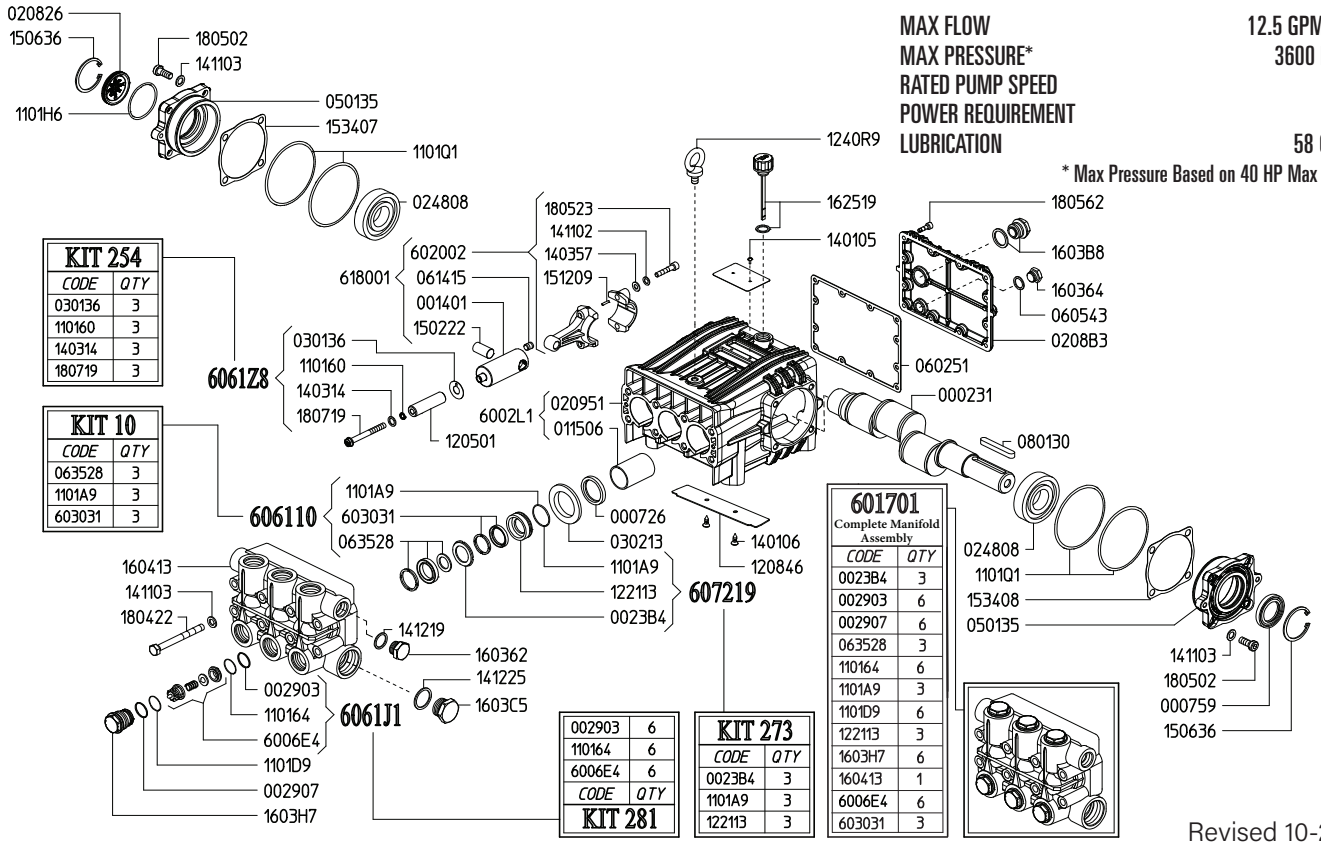

KIT 254	
CODE	QTY
030136	3
110160	3
140314	3
180719	3

KIT 10	
CODE	QTY
063528	3
1101A9	3
603031	3

KIT 281	
002903	6
110164	6
6006E4	6
CODE	QTY

KIT 273	
CODE	QTY
0023B4	3
1101A9	3
122113	3

601701 Complete Manifold Assembly	
CODE	QTY
0023B4	3
002903	6
002907	6
063528	3
110164	6
1101A9	3
1101D9	6
122113	3
1603H7	6
160413	1
6006E4	6
603031	3

Revised 10-21-2021

Part #	Description	Qty
0002.31	CRANKSHAFT 30MM	1
0007.26	OIL SEAL D35	3
0007.59	OIL SEAL	1
0014.01	PLUNGER GUIDE	3
0023.B4	UPPER RING D22 [D E]	3
0029.03	BACK UP RING [C E]	6
0029.07	RING – VALVE PLUG [E]	6
0115.06	BUSHING D35	3
0208.26	OIL SIGHT GLASS	1
0208.B3	BACK COVER	1
0209.51	CRANKCASE	1
0248.08	BALL BEARING	2
0301.36	SLINGER RING [A]	3
0302.13	SPACER	3
0501.35	BEARING FLANGE	2
0602.51	GASKET – PUMP BODY	1
0605.43	GASKET – D17	1
0614.15	SET SCREW	3
0635.28	HIGH PRESSURE SEAL KIT D22 [B E]	3
0801.30	KEY	1
1101.60	O-RING – PLUNGER BOLT [A]	3
1101.64	O-RING – VALVE [C E]	6
1101.A9	O-RING – PRESSURE RING [B D E]	3
1101.D9	O-RING – VALVE PLUG [E]	6
1101.H6	O-RING – OIL SIGHT GLASS	1
1101.Q1	O-RING – BEARING FLANGE	4
1205.01	CERAMIC PLUNGER D22	3
1208.46	PLATE	1
1221.13	PRESSURE RING D22 [D E]	3
1240.R9	LIFTING HOOK M10	1
1401.05	RIVET 3.5X8	2
1401.06	RIVET D4X10	2
1403.14	WASHER – PLUNGER BOLT [A]	3
1403.57	WASHER M8	6
1411.02	SERRATED WASHER D8	6

Part #	Description	Qty
1411.03	WASHER	16
1412.19	BONDED WASHER D21.5	1
1412.25	BONDED WASHER D33.9 (G1")	1
1502.22	PIN	3
1506.36	SNAP RING	2
1512.09	PIN D5X20	6
1534.07	GASKET – BEARING FLANGE	1
1534.08	SPACER / GASKET	1
1603.62	PLUG G1/2"	1
1603.64	PLUG 3/8"	1
1603.B8	OIL SIGHT GLASS W/GASKET	1
1603.C5	PLUG G1"	1
1603.H7	VALVE PLUG D22/25 [E]	6
1604.13	HEAD D22 [E]	1
1625.19	OIL CAP W/GASKET	1
1804.22	HEX BOLT	8
1805.02	ALLEN BOLT	8
1805.23	ALLEN BOLT M8X40	6
1805.62	ALLEN BOLT M6X20	12
1807.19	PLUNGER BOLT [A]	3
6002.L1	CRANKCASE ASSEMBLY	1
6006.E4	VALVE ASS'Y W/O O-RING [C E]	6
6017.01	COMPLETE MANFOLD ASSEMBLY NK D22	1
6020.02	CONNECTING ROD	3
6030.31	LOW PRESSURE SEAL KIT D22 [B E]	3
6180.01	CONNECTING ROD ASS'Y COMPLETE	3
6061.10	WATER SEAL KIT (KIT 10)	1
6061.J1	VALVE KIT (KIT 281)	1
6061.Z8	PLUNGER BOLT KIT (KIT 254)	1
6072.19	BRASS RING KIT D22 (KIT 273)	1

[A] Parts in 6061.Z8 (Kit 254).
[B] Parts in 6061.10 (Kit 10).
[C] Parts in 6061.J1 (Kit 281).
[D] Parts in 6072.19 (Kit 273).
[E] Parts in 6017.01 (Complete Manifold Assembly).

5121.G8

GAS ENGINE GEAR REDUCTION FOR NK-SERIES PLUNGER PUMPS on up to 40 HP B/S or HONDA GAS ENGINES with 1-1/8" SHAFTS

REQUIRES 15.2 OZ. 90W GEAR LUBE

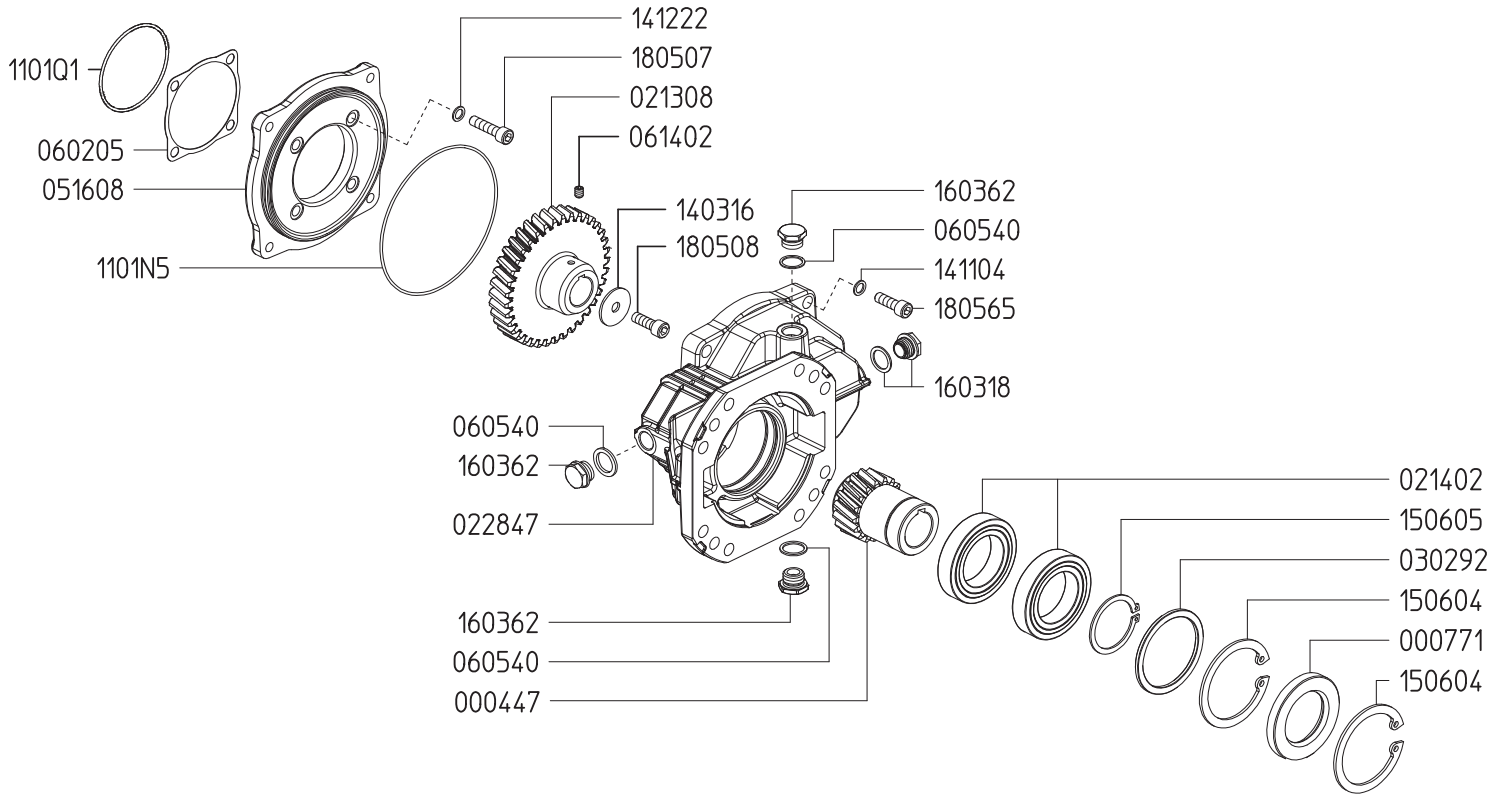

Revised 6-3-2021

Part #	Description	Qty
0004.47	GEAR SHAFT "RC122" 1-1/8"	1
0007.71	OIL SEAL D55	1
0213.08	GEAR	1
0214.02	BALL BEARING D55	2
0228.47	COUPLER	1
0302.92	SPACER	1
0516.08	FLANGE	1
0602.05	GASKET	1
0605.40	GASKET	3
0614.02	SET SCREW M8X10	1

Part #	Description	Qty
1101.N5	O-RING D158.42X2.62 (RIF.3625)	1
1101.Q1	O-RING - MOUNTING FLANGE	1
1411.04	SERRATED WASHER D12	4
1412.22	BONDED WASHER D10.7	4
1506.04	SNAP RING D90	2
1506.05	SNAP RING D55	1
1603.18	OIL PLUG G1/2 + GASKET	1
1603.62	PLUG G1/2	3
1805.07	ALLEN SCREW M10X40	4
1805.65	ALLEN SCREW M12X40	4

5121.G9

GAS ENGINE GEAR REDUCTION FOR NK-SERIES PLUNGER PUMPS on up to 40 HP B/S or HONDA GAS ENGINES with 1-7/16" SHAFTS

REQUIRES 15.2 OZ. 90W GEAR LUBE

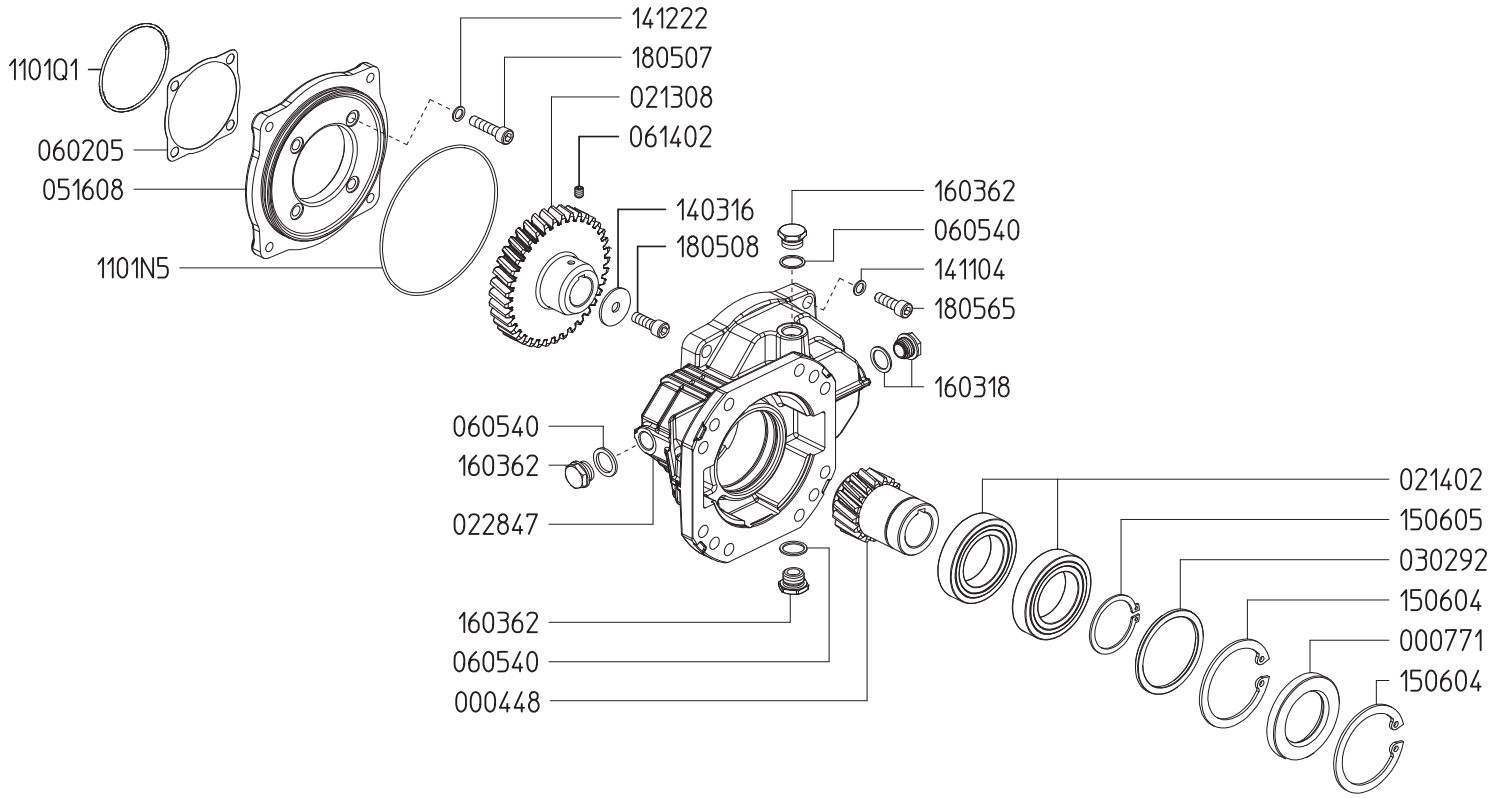

Revised 6-3-2021

Part #	Description	Qty
0004.48	GEAR SHAFT "RC122" 1-7/16"	1
0007.71	OIL SEAL D55	1
0213.08	GEAR	1
0214.02	BALL BEARING D55	2
0228.47	COUPLER	1
0302.92	SPACER	1
0516.08	FLANGE	1
0602.05	GASKET	1
0605.40	GASKET	3
0614.02	SET SCREW M8X10	1

Part #	Description	Qty
1101.N5	O-RING D158.42X2.62 (RIF.3625)	1
1101.Q1	O-RING - MOUNTING FLANGE	1
1411.04	SERRATED WASHER D12	4
1412.22	BONDED WASHER D10.7	4
1506.04	SNAP RING D90	2
1506.05	SNAP RING D55	1
1603.18	OIL PLUG G1/2 + GASKET	1
1603.62	PLUG G1/2	3
1805.07	ALLEN SCREW M10X40	4
1805.65	ALLEN SCREW M12X40	4

5122.G8

GAS ENGINE GEAR REDUCTION FOR NK-SERIES PLUNGER PUMPS on up to 40 HP KOHLER GAS ENGINES with 1-1/8" SHAFTS

REQUIRES 15.2 OZ. 90W GEAR LUBE

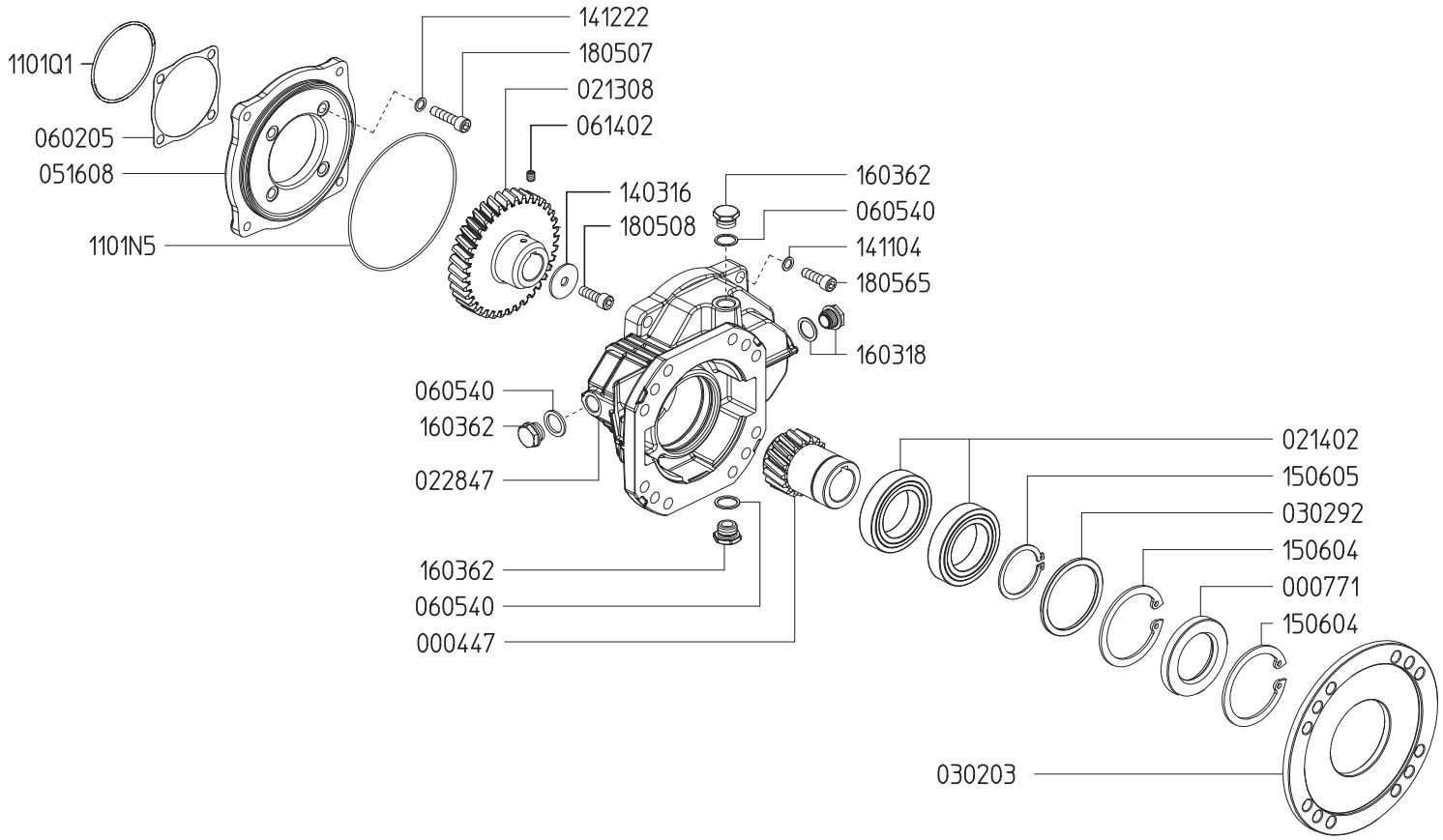

Revised 6-3-2021

Part #	Description	Qty
0004.47	GEAR SHAFT "RC122" 1-1/8"	1
0007.71	OIL SEAL D55	1
0213.08	GEAR	1
0214.02	BALL BEARING D55	2
0228.47	COUPLER	1
0302.03	SPACER - KOHLER ENGINE MOUNT	1
0302.92	SPACER	1
0516.08	FLANGE	1
0602.05	GASKET	1
0605.40	GASKET	3
0614.02	SET SCREW M8X10	1

Part #	Description	Qty
1101.N5	O-RING D158.42X2.62 (RIF.3625)	1
1101.Q1	O-RING - MOUNTING FLANGE	1
1411.04	SERRATED WASHER D12	4
1412.22	BONDED WASHER D10.7	4
1506.04	SNAP RING D90	2
1506.05	SNAP RING D55	1
1603.18	OIL PLUG G1/2 + GASKET	1
1603.62	PLUG G1/2	3
1805.07	ALLEN SCREW M10X40	4
1805.65	ALLEN SCREW M12X40	4

5122.G9

GAS ENGINE GEAR REDUCTION FOR NK-SERIES PLUNGER PUMPS on up to 40 HP KOHLER GAS ENGINES with 1-7/16" SHAFTS

REQUIRES 15.2 OZ. 90W GEAR LUBE

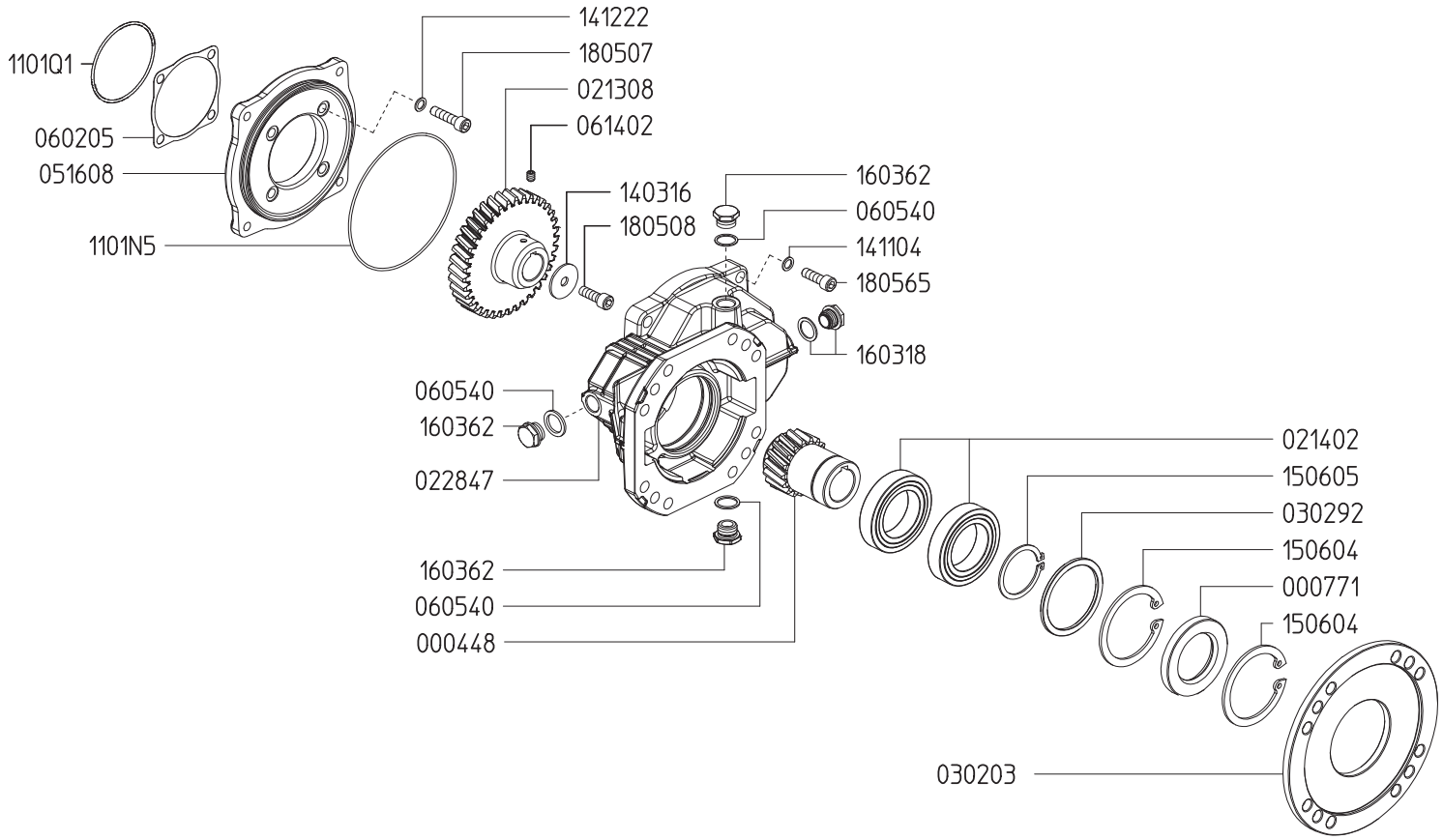

Revised 6-3-2021

Part #	Description	Qty
0004.48	GEAR SHAFT "RC122" 1-7/16"	1
0007.71	OIL SEAL D55	1
0213.08	GEAR	1
0214.02	BALL BEARING D55	2
0228.47	COUPLER	1
0302.03	SPACER - KOHLER ENGINE MOUNT	1
0302.92	SPACER	1
0516.08	FLANGE	1
0602.05	GASKET	1
0605.40	GASKET	3
0614.02	SET SCREW M8X10	1

Part #	Description	Qty
1101.N5	O-RING D158.42X2.62 (RIF.3625)	1
1101.Q1	O-RING - MOUNTING FLANGE	1
1411.04	SERRATED WASHER D12	4
1412.22	BONDED WASHER D10.7	4
1506.04	SNAP RING D90	2
1506.05	SNAP RING D55	1
1603.18	OIL PLUG G1/2 + GASKET	1
1603.62	PLUG G1/2	3
1805.07	ALLEN SCREW M10X40	4
1805.65	ALLEN SCREW M12X40	4

NK SERIES DIMENSIONS

WEIGHT	67 LBS
LUBRICATION	58 OZ UDOR LUBE

Dimensional Drawings are Shown in Millimeters. To Convert to Inches, Multiply Dimension x 0.03937

NK SERIES PUMPS 22mm & 25mm Plungers

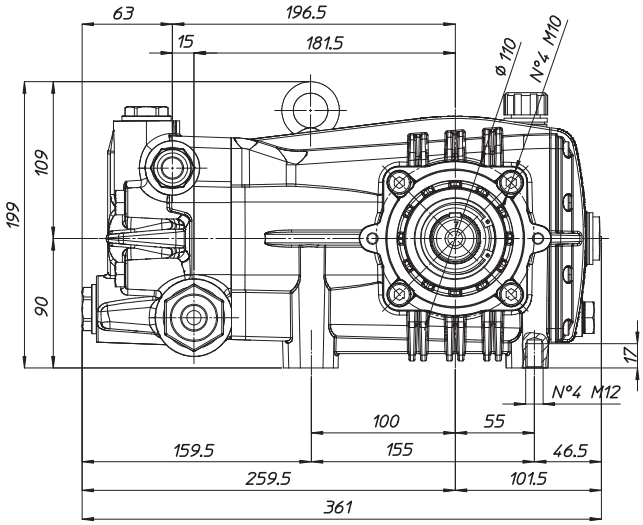

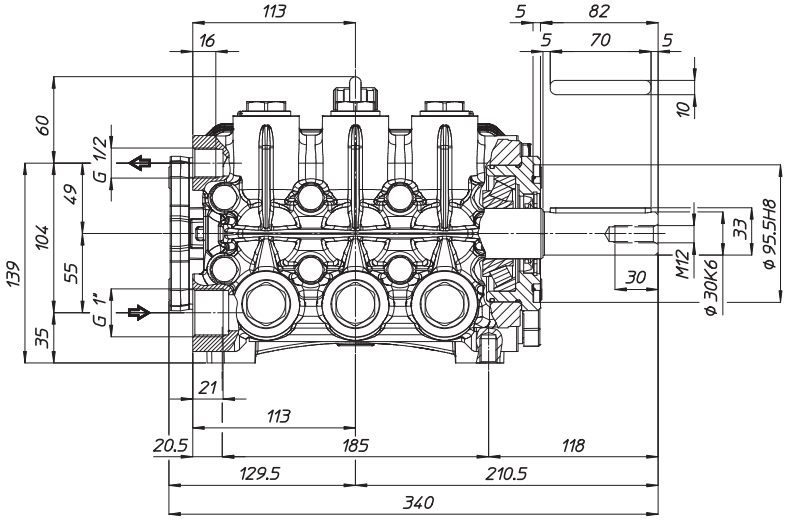

TORQUE SPECS
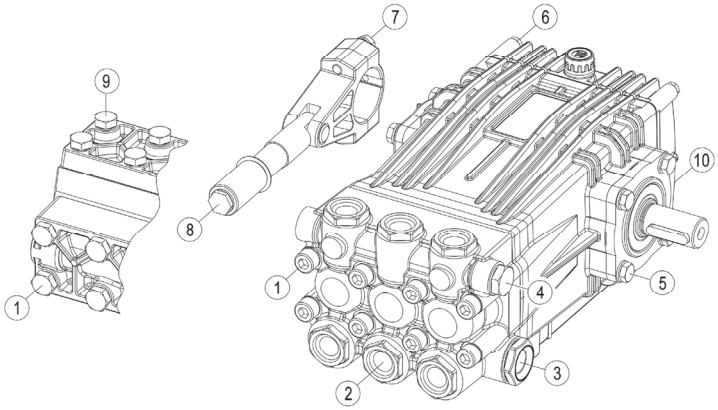
Ref.	Description	Ft./lb.	Nm	Loctite®
1	Head Bolts	37	50	-
2	Valve Caps	88	120	243
3	Inlet Cap	133	180	-
4	Outlet Cap	88	120	243
5	Bearing Flange Bolts	37	50	-
6	Rear Cover Bolts	8	11	-
7	Connecting Rod Bolts	19	25	243
8	Plunger Bolts	22	30	270
9	Valve Cover Bolts	-	-	-
10	Oil Drain Plug	8	11	-