6005.08

Adjustable Pressure Regulator

Maximum Flow	66.0 GPM / 250 lpm
Maximum Pressure	1200 PSI / 81 bar
Inlet Port	3/4" Male BSP
Outlet Ports	-
Bypass - Hose Barb	1-1/2" HB

606254	
KIT 553	
■	
CODE	QTY
090325	1
110101	1
110131	1
120413	1
150125	1
181001	1

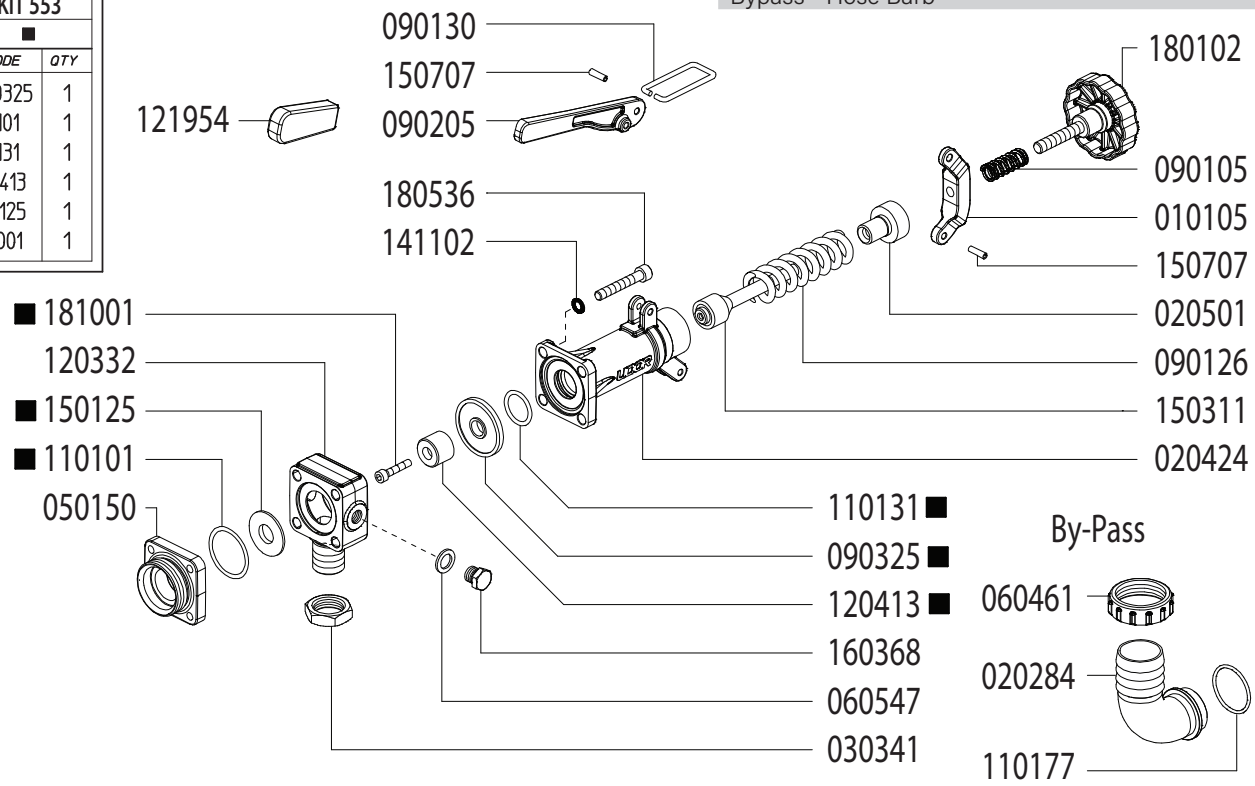

Revised 7-15-2024

Part #	Description	Qty
0101.05	LEVER GUIDE	1
0202.84	1" BRASS ELBOW HOSE BARB	1
0204.24	VALVE BODY	1
0205.01	VALVE CYLINDER	1
0303.41	NUT	1
0501.50	FLANGE	1
0604.61	BARB NUT	1
0605.47	GASKET D8	1
0901.05	SPRING	1
0901.30	PRESSURE BAIL	1
0901.26	SPRING	1
0902.05	HANDLE	1
0903.25 ■	DIAPHRAGM	1
1101.01 ■	O-RING - BYPASS FLANGE	1
1101.31 ■	O-RING - VALVE BODY	1

Part #	Description	Qty
1101.77	O-RING - BYPASS HOSE BARB	1
1203.32	INLET ELBOW - 3/4" MALE BSP	1
1204.13	POPPET ■	1
1219.54	HANDLE COVER - RUBBER	1
1501.25	SEAT ■	1
1503.11	REGULATOR STEM	1
1507.07	PIN	2
1603.68	PLUG - 1/4" BRASS	1
1801.02	ADJUSTMENT KNOB	1
1805.36	BOLT	4
1810.01	BOLT - STAINLESS STEEL ■	1
GG1500	HIGH PRESSURE GAUGE (OPTIONAL)	1
6062.54	REPAIR KIT (KIT 553)	

■ Parts Included in Repair Kit #6062.54 (KIT 553)

OPERATING INSTRUCTIONS

1. Before operating or re-operating pump, lift R.V. Handle (0902.05) so pump will start at zero pressure. **FAILURE TO DO SO WILL VOID PUMP WARRANTY**.
2. Turn Pressure Adjustment Knob (1801.02) counter-clockwise to relieve spring tension. (Step 2 is only necessary on initial start-up and is not necessary for daily operation.)
3. Start unit and let run until air is evacuated from system, when only liquid is expelled from the bypass line.
4. Return R.V. Handle (0902.05) to down position. Open spray gun or spray boom and turn adjustment knob (1801.02) clockwise until desired operating pressure is achieved.