CH Series

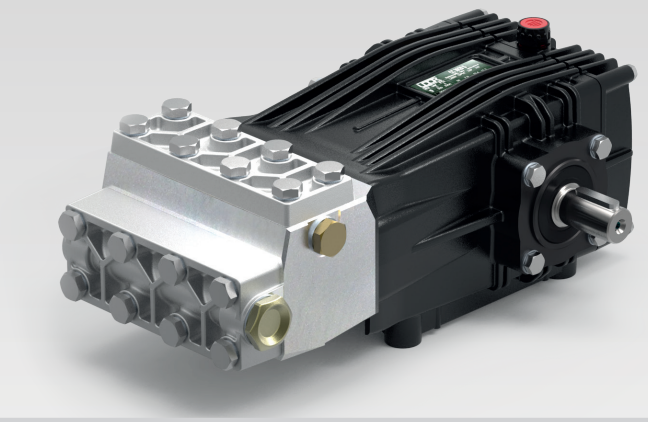

- **Solid Ceramic Plungers**
- **Stainless Steel Check Valves**
- **Stainless Steel Block Manifold with Nickel Plated Valve Covers**
- **Deeper Back Cover for Increased Oil Capacity**
- **35 oz. Capacity Vented Oil Bath Crank Case**
- **3/4" BSP-F Inlet. 3/8" BSP-F Outlet**
- **Max Fluid Temp, 160°F**

Solid Shaft Models

24mm Keyed Solid Shaft

	Model	GPM	l/min	PSI	bar	Power Req.	Seal Kit	Valve Kit	Wt.
1450 RPM	**CHC 12/50-S**	3.2	12	7250	500	15.5 EBHP	6061.88 (Kit 88)	6061.G1 (Kit 152)	49 lbs
	CHC 16/50-S	4.2	15	7250	500	20.5 EBHP	6061.88 (Kit 88)	6061.G1 (Kit 152)	49 lbs
	CHC 20/50-S	5.3	20	7250	500	26 EBHP	6061.G2 (Kit 153)	6061.G1 (Kit 152)	49 lbs
1750 RPM	**CHD 3.0/75-S**	3.0	12	7250	500	15 EBHP	6061.88 (Kit 88)	6061.G1 (Kit 152)	49 lbs
	CHD 4.5/75-S	4.2	15	7250	500	20.5 EBHP	6061.88 (Kit 88)	6061.G1 (Kit 152)	49 lbs
Rail Kit	**8702.08**	Standard 7/8" Rail Kit for C-Series Solid Shaft Pumps							
	8702.07	Medium 1-3/4" Rail Kit for C-Series Solid Shaft Pumps							
	8702.25	Tall 2-1/2" Rail Kit for C-Series Solid Shaft Pumps							

- **Standard with 1" Hollow Shaft**
- **Available with 1-1/8" Hollow Shaft. Add '1-1/8' to Model Number to Specify when Ordering**

Gear Reduction, Gas Engine Models

1" Hollow Shaft. 2.2:1 Gear Reduction

	Model	GPM	l/min	PSI	bar	Power Req.	Seal Kit	Valve Kit	Wt.
Gear Reduction	**CHC 12/50-GR**	3.2	12	7250	500	20.0 HP Gas	6061.88 (Kit 88)	6061.G1 (Kit 152)	59 lbs
	CHC 16/50-GR	4.2	15	7250	500	26.0 HP Gas	6061.88 (Kit 88)	6061.G1 (Kit 152)	59 lbs
	CHC 20/50-GR	5.3	20	7250	500	34.0 HP Gas	6061.G2 (Kit 153)	6061.G1 (Kit 152)	59 lbs

CH-Series Dimensional Drawings
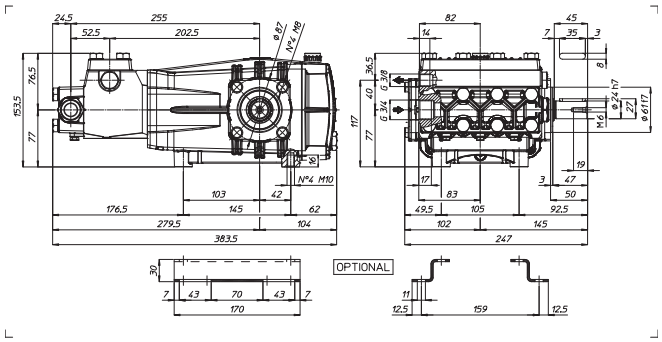
Dimensional Drawings are Shown in Millimeters. To Convert to Inches, Multiply Dimension x 0.03937