PK Series

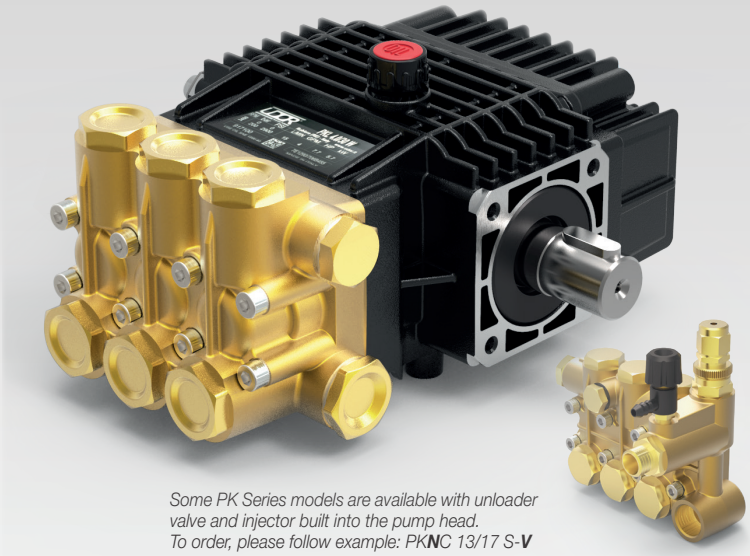

Some PK Series models are available with unloader valve and injector built into the pump head.
*To order, please follow example: PK**N**C 13/17 S-**V***

- **Brass Manifold**
- **Heat Treated Crankshaft**
- **Stainless Steel Piston Guides**
- **High Strength Aluminum Alloy or Bronze Connecting Rods**
- **Industrial Quality Ball Bearings and Needle Bearings**
- **Solid Ceramic Plungers**
- **Stainless Steel Check Valves**
- **Heavy Duty Flat Base High Pressure Seals**
- **Dual Oil Sight Gauges**
- **10 oz. Capacity Vented Oil Bath Crank Case**
- **1/2″ BSP-F Inlet. 3/8″ BSP-F Outlet**
- **Max Fluid Temp, 160°F**

Solid Shaft Models

24mm Keyed Solid Shaft

	Model	GPM	l/min	PSI	bar	Power Req.	Seal Kit	Valve Kit	Wt.
1450 RPM	**PKC 09/20 S**	2.4	9	3000	200	5 EBHP	6061.07 (Kit 7)	6061.02 (Kit 2)	14 lbs
	PKC 10/20 S	2.6	10	3000	200	5 EBHP	6061.07 (Kit 7)	6061.02 (Kit 2)	14 lbs
	PKC 11/17 S	2.9	11	2500	170	5 EBHP	6061.E2 (Kit 135)	6061.02 (Kit 2)	14 lbs
	PKC 13/17 S	3.4	13	2500	170	6 EBHP	6061.E2 (Kit 135)	6061.02 (Kit 2)	14 lbs
	PKC 15/15 S	4.0	15	2000	150	6 EBHP	6061.E2 (Kit 135)	6061.02 (Kit 2)	14 lbs
Rail Kit	**8702.10**					Standard 7/8″ Rail Kit for P-Series Solid Shaft Pumps			

Some PK Series models are available with unloader valve and injector built into the pump head.
*To order, please follow example: PK**N**C 13/17 S-**V***

- **Brass Manifold**
- **Heat Treated Crankshaft**
- **Stainless Steel Piston Guides**
- **High Strength Aluminum Alloy or Bronze Connecting Rods**
- **Industrial Quality Ball Bearings and Needle Bearings**
- **Solid Ceramic Plungers**
- **Stainless Steel Check Valves**
- **Heavy Duty Flat Base High Pressure Seals**
- **Dual Oil Sight Gauges**
- **10 oz. Capacity Vented Oil Bath Crank Case**
- **1/2″ BSP-F Inlet. 3/8″ BSP-F Outlet**
- **Max Fluid Temp, 160°F**

Direct Drive, Gas Engine Flange Models

1″ Hollow Shaft with Mounting Flange and Set Screw

	Model	GPM	l/min	PSI	bar	Power Req.	Seal Kit	Valve Kit	Wt.
3400 RPM	**PKL 3.0/30-W**	3.0	11	3000	200	8 HP Gas	6061.07 (Kit 7)	6061.02 (Kit 2)	16 lbs
	PKL 3.5/30-W	3.5	13	3000	200	9 HP Gas	6061.07 (Kit 7)	6061.02 (Kit 2)	16 lbs
	PKL 4.0/30-W	4.0	15	3000	200	11 HP Gas	6061.07 (Kit 7)	6061.02 (Kit 2)	16 lbs

PK Series

- Brass Manifold
- Heat Treated Crankshaft
- Stainless Steel Piston Guides
- High Strength Aluminum Alloy or Bronze Connecting Rods
- Industrial Quality Ball Bearings and Needle Bearings
- Solid Ceramic Plungers
- Stainless Steel Check Valves
- Heavy Duty Flat Base High Pressure Seals
- Dual Oil Sight Gauges
- 10 oz. Capacity Vented Oil Bath Crank Case
- 1/2" BSP-F Inlet. 3/8" BSP-F Outlet
- Max Fluid Temp, 160°F

Some PK Series models are available with unloader valve and injector built into the pump head.
*To order, please follow example: PK**N**C 13/17 S-**V***

Direct Drive, Electric Flange Models

1-1/8" Hollow Shaft with 182/184 Mounting Flange

	Model	GPM	l/min	PSI	bar	Power Req.	Seal Kit	Valve Kit	Wt.
1750 RPM	**PKD 4.0/25-U**	4.0	15	2500	170	6.5 EBHP	6061.E2 (Kit 135)	6061.02 (Kit 2)	16 lbs

P-Series Dimensional Drawings

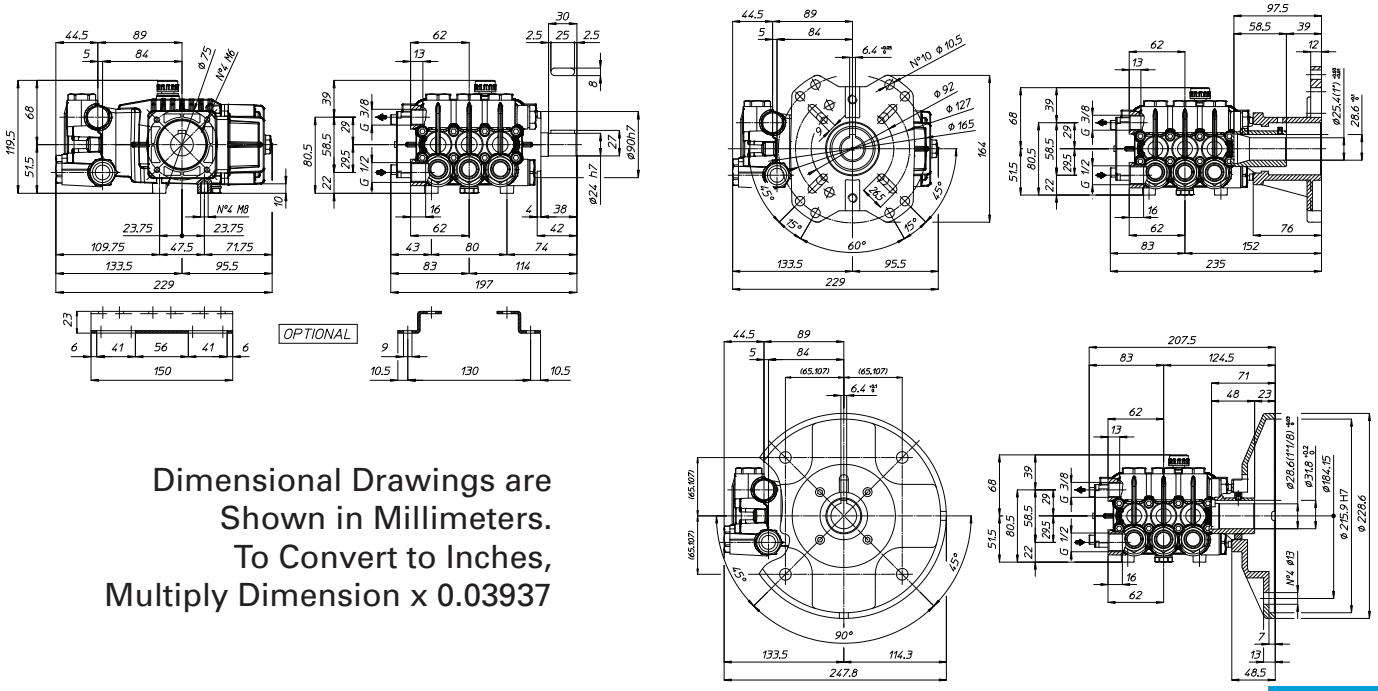

Dimensional Drawings are Shown in Millimeters. To Convert to Inches, Multiply Dimension x 0.03937