5055.E7

GAS ENGINE GEAR REDUCTION FOR P-SERIES PLUNGER PUMPS on up to 6.5 HP GAS ENGINES

REQUIRES 6 OZ. 90W GEAR LUBE

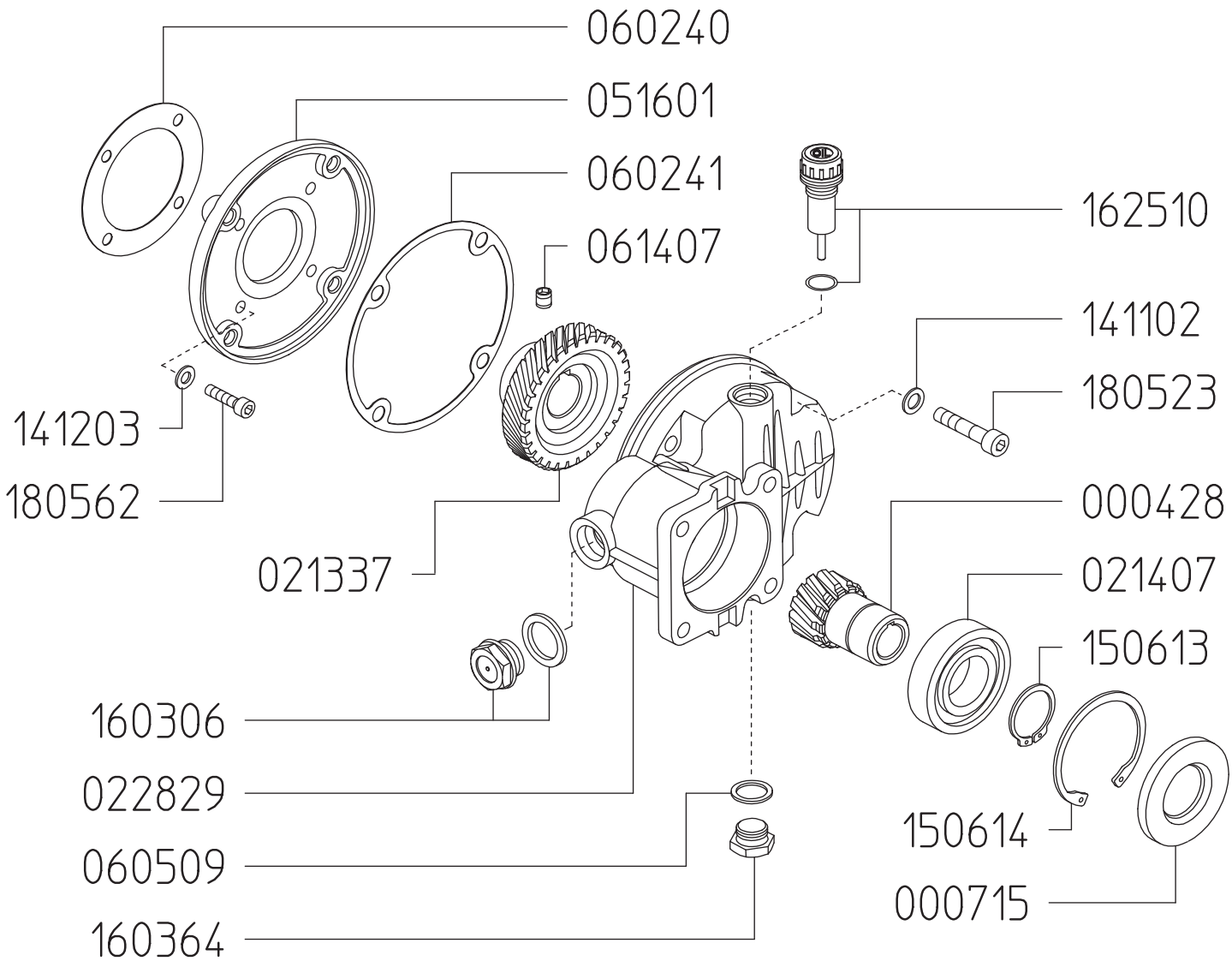

Part #	Description	Qty
0004.28	GEAR SHAFT “RP123” D19.05	1
0007.15	OIL SEAL D30	1
0213.37	GEAR “RP123” D24	1
0214.07	BALL BEARING D30	1
0228.29	COUPLER “RP123”	1
0516.01	FLANGE “RP123”	1
0602.40	GASKET “RP123”	1
0602.41	GASKET “RP123”	1
0605.09	GASKET D17	1
0614.07	SET SCREW M8X10 UNI5923	1

Part #	Description	Qty
1411.02	SCHNORR WASHER D8	4
1412.03	SCHNORR WASHER D10	4
1506.13	SNAP RING D30	1
1506.14	SNAP RING D62	1
1603.06	OIL PLUG G1/2 + GASKET	1
1603.64	PLUG G3/8	1
1625.10	OIL PLUG G3/8 “PN”	1
1805.23	ALLEN SCREW M8X40 UNI5931	4
1805.62	ALLEN SCREW M6X20 UNI5931	4